Final Report

STUDY AND RECOMMENDATIONS PERTAINING TO THE HIGHBROOK AVENUE NYW&B RAILWAY BRIDGE

PREPARED BY

MODJESKI and MASTERS
Experience great bridges.

Final Submission July 13, 2012

For the

Village of Pelham, New York

Table of Contents

Page

INTRODUCTION 1

INSPECTION 1

OPTIONS 3

COST COMPARISON 6

DISCUSSION 6

RECOMMENDATIONS 7

APPENDIX A
- **LOCATION PLAN** A1

APPENDIX B - SKETCHES
- **GENERAL VIEWS -1** B1
- **GENERAL VIEWS -2** B2
- **GENERAL VIEWS -3** B3

APPENDIX C
- **PHOTOGRAPHS** C1

APPENDIX D - COST ESTIMATES
- **OPTION 1A COST ESTIMATE** D1
- **OPTION 1B COST ESTIMATE** D2
- **OPTION 2A COST ESTIMATE** D3
- **OPTION 2B COST ESTIMATE** D4
- **OPTION 3A COST ESTIMATE** D5
- **OPTION 3B COST ESTIMATE** D6
- **OPTION 3A AND 3B WORK ITEM (RETAINING WALL REMOVAL) COST ESTIMATE** D7
- **OPTION 4 COST ESTIMATE** D8

APPENDIX E
- **MAY 04, 2012 LETTER – SUMMARY REPORT OF POTENTIAL SAFETY HAZARDS** E1

INTRODUCTION:

Modjeski and Masters, Inc. has been retained by the Village of Pelham to assess the safety and stability of the New York, Boston and Westchester Railroad Bridge over Highbrook Avenue and to provide recommendations for corrective actions and develop preliminary cost estimates for rehabilitation and demolition options.

The main bridge is an earth filled concrete spandrel arch. It was constructed in approximately 1910 and the last train reportedly to be carried by the bridge was in 1942. The bridge spans Highbrook Avenue between Lincoln Avenue and Harmon Avenue (see Appendix A - Location Plan). Highbrook Avenue is a two lane road with a curb to curb width of 28 feet and 4 inches. The vertical faces of the arch are set back approximately 11 feet and 6 inches from the curb lines. There are 4 foot sidewalks on each side of the roadway.

The bridge is on a skew of approximately 20 degrees with a bridge length of 120 feet, between the ends of the wingwalls and is approximately 40 feet wide. The bridge is 25 feet high and has a maximum underclearance of 17 feet 8 inches. At the ends of the arch spandrel walls are 14 foot wide decorative pilasters adjoined by 15 foot 6 inch long wingwalls at each corner. Retaining walls extend beyond the wingwalls until the railroad fill meets the surrounding grade. The height of the retaining walls is approximately 5 feet less than the wingwalls and protrudes out from the wingwall face by 4 feet 6 inches. The lengths of the retaining walls range from 64 feet to 175 feet long. For general photographs of the structure, see Appendix C Photograph Nos. 1 through 10 (also see Appendix B - Sketches, General Views 1 and 2).

INSPECTION:

On April 4 and 5, 2012, Christopher P. Ahlskog, P.E. and Michael D. Clauser, EIT of Modjeski and Masters, Inc. (M&M), performed an inspection of the Highbrook Avenue NYW&B Railway Bridge. A report concerning the potential safety hazards, dated May, 4, 2012, was previously submitted (attached in Appendix E). This report addressed the immediate potential safety issues and contained some preliminary cost estimates for several options for corrective actions for these issues. The earlier submitted report only addressed the potential safety issues resulting from loose (spalled, unsound and delaminated) concrete sections located above or near the roadway and sidewalks and unrestricted access to the top side of the bridge and retaining walls. This report will address the additional components of the bridge and the bridge site.

Spandrel Arch, Pilasters and Wingwalls

The spandrel walls, arch fascia, pilasters and wingwalls all exhibit a significant amount of loose and deteriorated concrete (see Appendix C Photograph Nos. 11 through 15). The bridge appears to have been constructed with a thin layer of parging placed over the structural concrete. Much of the loose concrete observed is this thin layer of parging delaminating from the surfaces (see Appendix C Photograph No. 12). In areas where the parging layer has already fallen, the surface of the concrete underneath exhibits deterioration up to several inches deep (see Appendix C Photograph No. 18). The intrados of the arch is generally in good condition with a few localized areas of spalled or unsound concrete (see Appendix C Photograph Nos. 10 and 14). There is a 30 inch wide by 30 inch high cap block with coping on the top of the wingwalls, pilasters and spandrel walls. This cap block is typically severely deteriorated (see Appendix C Photograph No. 13). The pilasters also contain a short pyramidal spire on top, which all exhibit varying levels of deteriorated concrete (see Appendix C Photograph No. 8).

Other than the deterioration of the surface concrete on the arch, pilasters and wingwalls, the filled spandrel arch is in good condition, showing no signs of structural instability. Previous concrete testing indicated that the concrete has sufficient strength and that external weathering is the primary cause for the current surface concrete deterioration. The concrete testing did indicate that the large stone aggregate used in the concrete is significantly larger than what would be typically used in modern concrete. This large aggregate material may cause challenges with any concrete repair work (see Appendix C Photograph No. 21).

Retaining Walls

The four retaining walls begin at the ends of the wingwalls and extend until the existing ground line matches the top fill elevation. The retaining walls are approximately 20 feet high, and the exposed height reduces to approximately 30 inches toward the ends. The approximate lengths of the retaining walls are as follows: 64 feet northeast wall, 95 feet southeast wall, 152 feet northwest wall and 175 feet southwest wall

The retaining walls are all in poor condition (see Appendix C Photographs 15 through 20). The concrete used for the retaining wall construction appears to be of a much poorer quality than that used in the arch. The concrete contains aggregate of similar or even larger size than the arch concrete. This aggregate also appears to consist of a significant amount of weak layered mica type rocks. There is also very heavy vegetation growth on both the southwest and northwest walls. This vegetation is contributing to the severe deterioration of the surface concrete in these walls. The retaining walls were constructed with the same thin layer of parging as the arch span. This parging has fallen off over half of the retaining wall surfaces and the portions which remain are typically delaminated and unsound. The first sections of all four of the retaining walls adjacent to the wingwalls are severely deteriorated. At three out of four of these locations, the retaining wall concrete has eroded so deeply that the cap blocks have been undermined and have fallen (see Appendix C Photograph No. 15). The one remaining location where the cap block section still remains will likely fall in the near future if it is not removed. The severe erosion at these locations is likely due to the run-off of surface water from the arch span since the retaining walls step down approximately 5 feet from the wingwall elevation. There is another location on the northwest retaining wall where the wall has been severely eroded. It is a 2 foot by 10 foot long section along the ground line which has eroded up to 2 feet into the wall concrete. This is most likely due to water runoff along the slope.

There is a 30 inch wide by 30 inch high cap block with coping on the top of the retaining walls, similar to the arch span. This cap block is severely deteriorated in many locations and in some locations the retaining wall concrete is deteriorated just below and is undermining the cap block (see Photograph Nos. 15 and 16).

The poor concrete quality and the severe deterioration in the retaining walls will make conventional concrete repair work difficult and the longevity of the repair will be questionable.

Even with the extensive concrete deterioration throughout the retaining walls, there does not appear to be any signs of structural instability. The thick vegetation growth on a much of the retaining walls made these areas difficult for a thorough inspection. This vegetation should be completely removed and the exposed areas should be inspected again to ensure there is no significant deterioration requiring unforeseen repairs.

Bridge Site

The bridge site is located within a residential neighborhood. There are residential properties adjacent to all four sides of the bridge. There is also a residential property very close to the end of the retaining walls at the west end (see Appendix C Photograph No. 24). At the east end there a stretch of right-of-way that extends past Young Avenue up to a property off of Storer Avenue. The right-of-way along the bridge is approximately 30 feet on each side for the length of the bridge and retaining walls and is approximately 100 feet wide to the east of the bridge.

There is active spring near the end of the east retaining walls. Some minor work has been performed to channelize the water. Any rehabilitation work or structure removal in this area will need to address this.

The top side of the bridge and the fill between the retaining walls is covered with heavy vegetation. There are numerous trees and shrubs growing for the full length of the structure (see Appendix C Photograph Nos. 7 through 9 and 22 through 24). The roots from several large trees likely contributed to dislodging the fallen sections of cap blocks along the retaining wall noted previously. This vegetation growth on top and on the sides of the retaining walls will accelerate further deterioration of the bridge.

There are utility lines that pass under the arch span along the west curbline. No other utilities were noted on the bridge, this should be verified prior to starting any work on the bridge.

OPTIONS:

Listed below are several options for the bridge and the surrounding area that will be discussed in more detail in the following sections:

1A. Address safety issues and leave bridge unused.

1B. Restore arch and pilasters and leave bridge unused.

2A. Restore the arch span and retaining walls and leave bridge unused.

2B. Restore the arch span and retaining walls and provide for pedestrian use.

3A. Remove retaining walls. Restore the arch span and leave bridge unused.

3B. Remove retaining walls. Restore the arch span and provide for pedestrian use.

4. Remove entire structure.

Options 2 and 3 contain two variations. One variation is to only provide restorations to address safety issues and to enhance the aesthetic appearance of the bridge. The other variation is to include additional steps to make the bridge suitable for pedestrian use, which would include items such as providing access to the top of the bridge, adding safety railings and more extensive vegetation removal.

A cost comparison table is provided in the cost comparison section. Cost estimates for each of the options are attached in the Appendix D at the end of this report.

None of the rehabilitations options consider complete restoration to the original as-built condition. This option is too cost prohibitive to be considered a feasible choice. Restoring the architectural details such as the coping on the cap block and the short spires on the pilasters would take considerable cost and effort.

Option 1A - Address Safety Issues and Leave Bridge Unused:

This option is similar to what was covered in the previous letter report concerning the potential safety hazards, dated May, 4, 2012, (attached in Appendix E). This option involves the minimal amount of work to the structure while still addressing the safety issues. The work included in this option is as follows:

1. Remove loose, deteriorated concrete in the areas near or above the sidewalks and roadway using light hammers and compressed air. This should be performed on a yearly basis.
2. Remove the cap block from pilaster to pilaster on both the north and south sides of the bridge.
3. Removal of the undermined cap block section on the Southwest Wingwall.
4. Installation of additional fencing on the top of the structure to limit pedestrian access.
5. Routine inspection.

This option is only a temporary solution, good for up to approximately five years, before a long term option is chosen. The effectiveness of this option requires that the removal of loose concrete be performed at least on a yearly basis and that the structure is inspected at least biannually.

Option 1B – Restore Arch and Pilasters and Leave Bridge Unused:

This option includes concrete repair work to the arch and pilasters, additional vegetation removal on the tops of the wingwalls and retaining walls for additional protective fencing and additional cap block removal on sections of the retaining walls. This option provides the minimal restoration work while improving the aesthetics, and addressing the safety issues and some additional likely future deterioration concerns.

For this option, the entire faces of the pilasters will be repaired. The arch and the pilasters are the most visible portions of the structure from the sidewalks and roadway. This will improve the aesthetics and address the loose and crumbling concrete areas near and over the sidewalks and roadway. For the retaining walls, the cap block is typically the most severely deteriorated portion and the most likely portion to fall after future deterioration. Removal of this cap block will eliminate the primary concern with the retaining walls, and involves relatively minor work effort. The additional fencing for this option is assumed to extend for the full lengths of the wingwalls and retaining walls and cross transversely across at the ends of the retaining walls. This is intended to prevent all pedestrian access to the top side of the structure. The vegetation removal for the installation of the fencing along the tops of the wingwalls and retaining walls will also reduce future deterioration of the tops of these walls cause by the vegetation growing near and on top of the walls.

To extend the effectiveness of the repairs and reduce the possibility of future costly repairs, routine inspections and maintenance should be performed.

Option 2A - Restore the Arch Span and Retaining Walls and Leave Bridge Unused:

The May 4, 2012, report discussed concrete repair work in the locations of the pilasters and the arch only. This restoration option would also need to include concrete repairs to the wingwalls and retrofits to the retaining walls. The concrete repair work would be more extensive, beyond simply addressing the current safety hazard areas.

The concrete repairs to the wingwalls would consist of the same type of repair work as the pilasters and arch: removing all of the surface deteriorated concrete, doweling in steel reinforcing bars and placing new concrete.

As discussed previously, due to the poor quality of the retaining wall concrete, standard concrete repairs would likely be ineffective. The doweled in reinforcing bars may lose their bond and the new concrete may not effectively adhere to the existing concrete. This would result in repair failures after only a few years. A possible alternative would be to place precast concrete fascia panels against the retaining walls and anchor the panels through the retained fill to the panels on the other side. This could be a cost effective way to restore the retaining walls for aesthetics and to reduce future deterioration of the existing walls (see Sketch, General Views – 3). The cost estimate is based on this alternative.

Option 2B - Restore the Arch Span and Retaining Walls and Provide for Pedestrian Use:

In order to move from Option 2A to 2B, the following additional work would be required:

1. Extensive vegetation removal for entire length of the arch span and retaining walls.
2. Placing a layer of clean fill on top of existing fill to level out uneven surfaces cause by vegetation removal.
3. Add safety railing or fencing along entire length of retaining walls and the arch span.
4. Provide access to the top of the structure, including constructing pathways and likely adding stairways.

Option 3A - Remove Retaining walls, Restore the Arch Span and Leave Bridge Unused:

This option is similar to the previous option with the exception of the complete or partial removal of the retaining walls in lieu of restoring them. There are several possible alternatives for the removal of the retaining walls which are discussed in greater detail in Option 4, removal of the entire structure. The cost

estimate for Option 3A is based on complete removal of the existing retaining walls and the construction of new transverse retaining walls.

Option 3B - Remove Retaining walls, Restore the Arch Span and Provide for Pedestrian Use:

If this option is selected and the remaining structure is to be used for pedestrian traffic, additional work will be required similar to those additional items listed above for Option 2B. Providing access to the top of the structure will be more extensive for this option. Either larger stairways, more new fill up to the top of the structure or a combination of both will be required.

Option 4 - Remove the Entire Structure:

This option is the complete removal of the structure, foundations, vegetation and fill. The resultant area would be graded and landscaped to match the surrounding property. Due to the absence of plan information the volumes of concrete and fill removal and resultant costs were estimated based on engineering experience and are approximate.

This option would also include:

1. Relocation of Utility Lines before removal of structure
2. Erosion control in the resultant area after removal of structure
3. Removal/modification of drainage after removal of structure

At the end of the retaining walls the existing groundline is sloped to match the top of the fill. There is a residential property less than 10 feet from the end of the west retaining walls. The stability of the existing soil on the adjacent property must be maintained. A similar situation occurs at the end of the east retaining walls, there are no adjacent residential properties directly to the east, but the soil beyond the end of the retaining wall would still need to be supported in some manner. Also the property lines parallel to the retaining walls are approximately 30 feet away. This will affect the limits of any soil regarding in the areas of the retaining walls.

There are several possible alternatives for the removal of the retaining walls. One alternative would be to regrade along the ends of the retaining walls and only partially remove the exposed portions of the retaining walls above the groundline (see Appendix B - Sketches, General Views - 3, Retaining Wall Removal Options, shown at West retaining walls). A second alternative would be to build new transverse retaining walls to support the soil beyond the limits of the removed retaining walls (see Appendix B - Sketches, General Views - 3, Retaining Wall Removal Options, shown at East retaining walls). Other possible alternatives could include new short retaining walls along the property lines to extend the limits of the regarding alternative or a combination of two or more of the alternatives.

Additional survey information would be needed to determine the best solution for the retaining wall removal. The cost estimate for Option 4 uses the alternative of complete wall removal and new transverse retaining walls, since the cost of this alternative would likely be the highest.

The proposed use of the property after the retaining walls or entire structure is removed should be considered when selecting an alternative. If the new transverse retaining wall alternative is chosen, the amount of level, usable property is maximized.

With any of these alternatives, drainage and erosion control will be a concern in these areas, particularly since there are residential properties along all four corners of the structure.

COST COMPARISON:

The following tables shows a cost estimate comparison of the initial costs and the long term costs for each of the seven options:

Option	Initial Cost	1 yr. Maintenance (Each)	2 yr. Inspection (Each)	Total Cost After 5 Yrs
1A	$125,000	$25,000	$10,000	$270,000

COST ESTIMATE COMPARISON – INTIAL AND LONG TERM COST ESTIMATES					
Option	**Initial Cost**	**2 yr. Inspection (Each)**	**5 yr. Maintenance (Each)**	**Total Cost After 20 Yrs**	**Total Cost After 40 Yrs**
1B	$525,000	$10,000	$125,000	$1,125,000	$1,725,000
2A	$2,125,000	$10,000	$75,000	$2,525,000	$2,925,000
2B	$2,550,000	$10,000	$100,000	$3,050,000	$3,550,000
3A	$2,825,000	$10,000	$50,000	$3,125,000	$3,425,000
3B	$3,075,000	$10,000	$75,000	$3,475,000	$3,875,000
4	$3,025,000	$0	$0	$3,025,000	$3,025,000

Each of the options 1A through 3B which involve leaving all or a portion of the structure in-place, will require reoccurring inspection and maintenance costs. The maintenance costs would include additional concrete repairs due to further deterioration over time, repairs to the railing and fencing, restoration of fill slopes, repairs to drainage and erosion control, vegetation control and maintenance of pedestrian walkway as required.

Note the values in the cost estimate are for current dollar values and the effects of inflation have not been included in the long term costs.

The detailed cost estimates for each of the options are given in Appendix D.

DISCUSSION:

Options 1A

This option is only a temporary solution to address the current safety issues. It has a relatively low initial cost; however, it will require a significant amount of yearly maintenance and routine inspections. This option should only be considered an interim solution (approximately 5 years) while a long term solution is being developed.

Options 1B, 2A and 3A– Restoration and Leave Bridge Unused:

These three options include restoration repairs to the bridge for safety and aesthetics only. The bridge will remain unused as it currently is. These options have the lowest initial cost and long term costs, however, there is a greater chance of potential safety issues and significant unforeseen repair maintenance costs.

Option 1B involves primarily the restoration of the arch and pilasters. This is the lowest cost long term option. This option does not account for the possibility of potential accelerated deterioration of the retaining walls or any unforeseen repairs after the vegetation on the side of the retaining walls is removed. These possibilities have the potential in resulting in much higher long term costs than originally estimated.

Option 2A addresses the potential future deterioration of the retaining walls or any unforeseen safety repair required to the wingwalls by reinforcing the existing wingwalls with precast panels. The estimated cost for this option is significantly higher than that of Option 1B; however, the future maintenance costs and effort are greatly reduced.

Option 3A addresses the retaining walls by removing them. The estimated cost for this option is the highest of these three options. There is a significant cost in the removal of the retaining walls, stabilizing the existing ground slopes and maintaining the existing fill within the wingwalls. The benefits to this option are similar to those of Option 2A.

Option 2B and 3B - Restoration and Provide for Pedestrian Use:

These two options include restoration repairs to the bridge for safety, aesthetics and pedestrian use. These options are similar to Options 2A and 3A listed above with the exception of the additional work required to provide for pedestrian use. The work to make the structure suitable for pedestrian traffic adds extra costs. However, the potential safety hazards of pedestrian access to the top of the bridge will be addressed with additional railing and more extensive vegetation removal.

The additional expense and work effort to provide for pedestrian access may make the restoration cost more justifiable, since the bridge will be in active use.

Option 4 - Remove the Entire Structure:

This option has the highest initial cost, however, it does eliminate any future safety issue and maintenance cost. The sale of the land after the structure removal may also significantly offset the initial removal costs.

RECOMMENDATIONS:

The report concerning the potential safety hazards, dated May, 4, 2012, addressed the current safety issues and gave recommendations on corrective actions to be taken. It is our understanding that some of the safety issues have been addressed and the remaining safety items will be addressed in the near future. If yearly maintenance (removing loose concrete) and biennial inspection are performed, a final decision on which long term option to choose can be delayed for several years until all of the factors are carefully investigated and considered.

Since it is our understanding that the Village doesn't have the available funds to proceed with any of the long term options at this time, it is recommended that a survey be performed for the structure and the surrounding area. This information will be required to develop a set of contract plans for any of the options other than Option 1B.

A set of contract plans could then be developed for one or several options and formal bid prices from contractors can be obtained for each option. With these formal bid prices and considering all of the additional factors a clear final decision can then be made.

APPENDIX A

LOCATION MAP

VILLAGE OF PELHAM - 195 Sparks Avenue, Pelham, NY, 10803

2012 BRIDGE INSPECTION – LOCATION PLAN

B.I.N.: 7712870 **CARRIERS:** New York, Westchester and Boston Railway Bridge

OVER: Highbrook Avenue

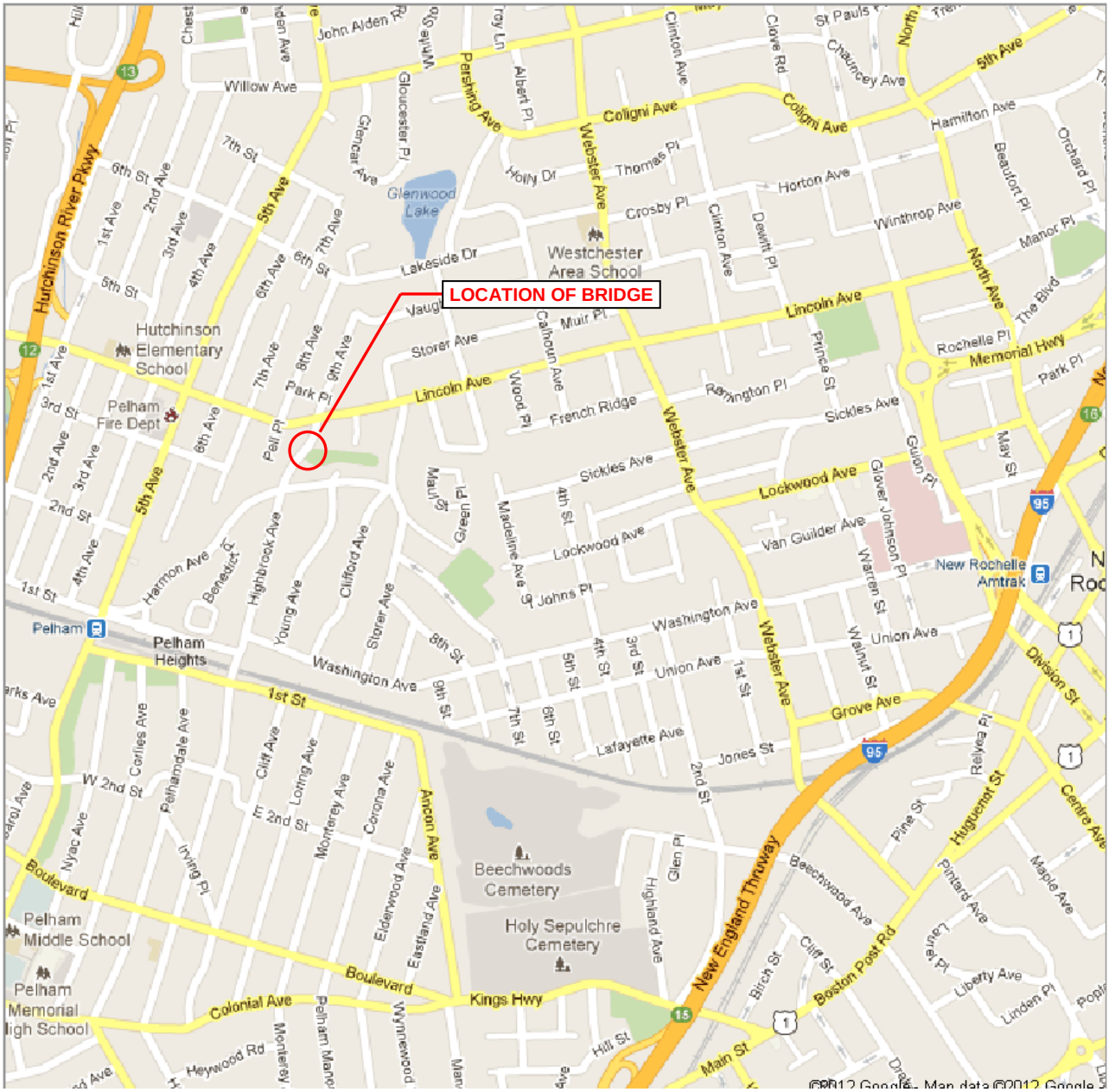

LOCATION PLAN

MODJESKI and MASTERS
Experience great bridges.

APPENDIX B

SKETCHES

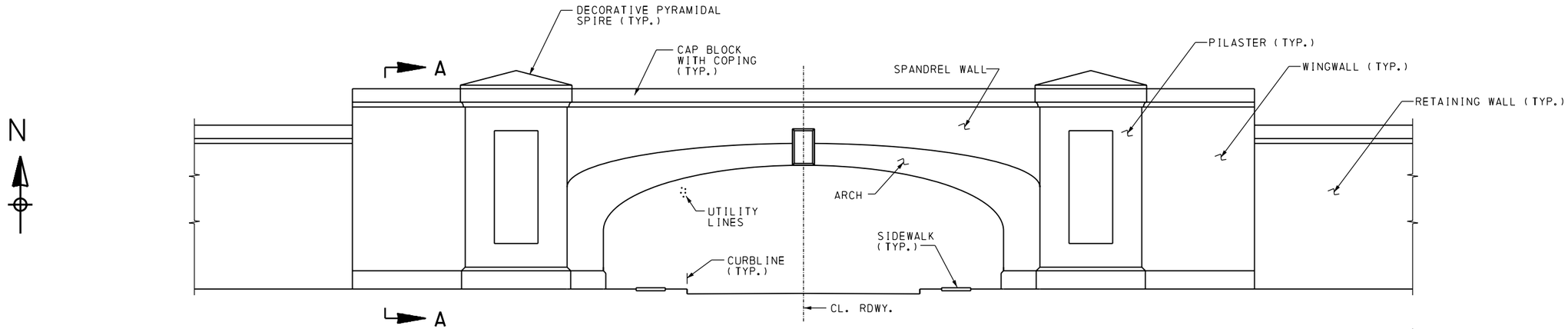

ELEVATION - GENERAL VIEW

(LOOKING NORTH)

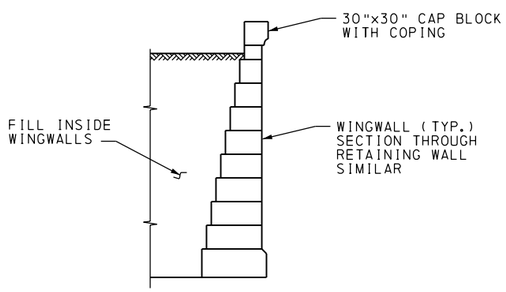

SECTION A-A

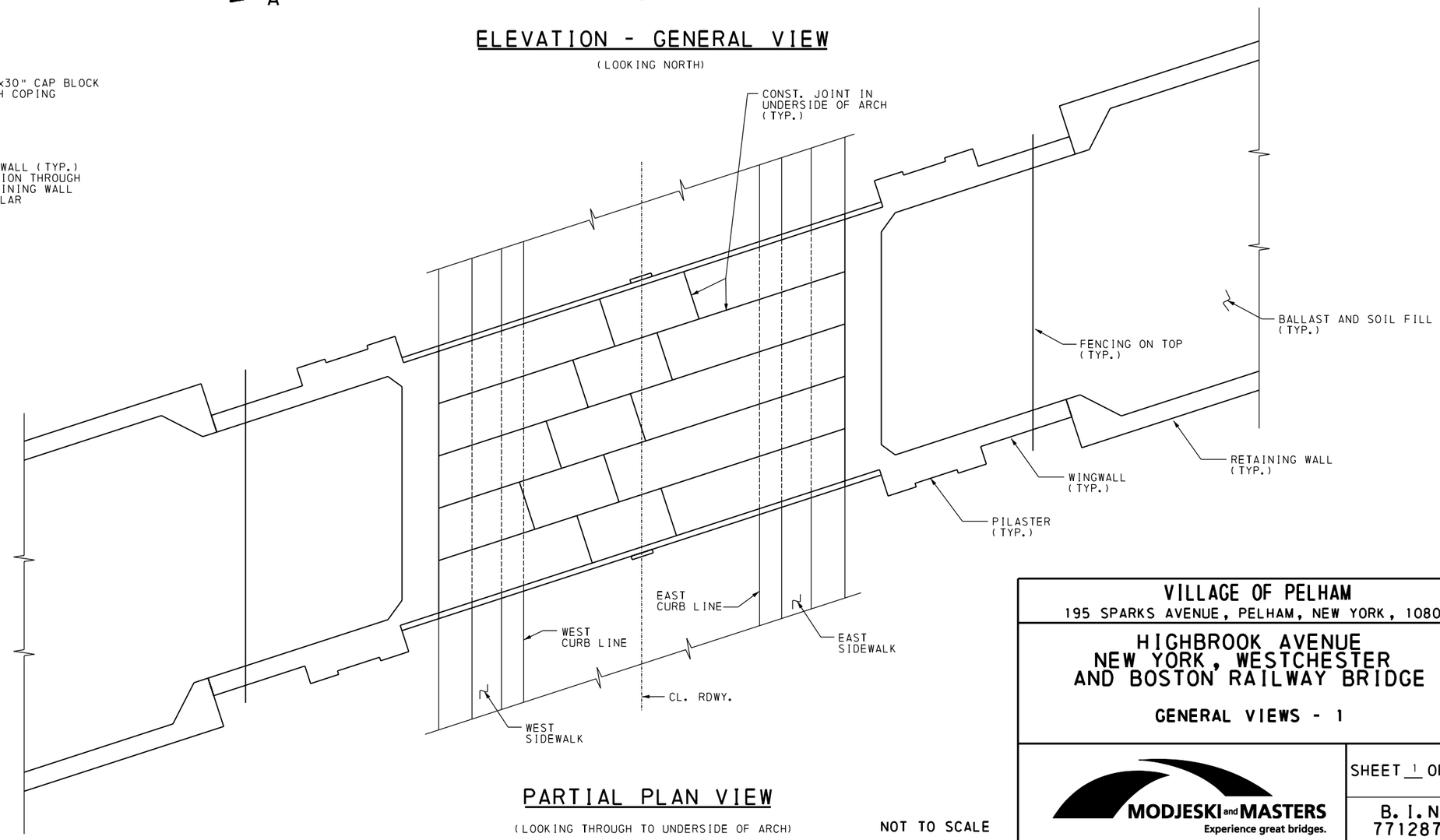

PARTIAL PLAN VIEW

(LOOKING THROUGH TO UNDERSIDE OF ARCH)

NOT TO SCALE

VILLAGE OF PELHAM
195 SPARKS AVENUE, PELHAM, NEW YORK, 10803

HIGHBROOK AVENUE
NEW YORK, WESTCHESTER
AND BOSTON RAILWAY BRIDGE

GENERAL VIEWS - 1

MODJESKI and MASTERS
Experience great bridges.

SHEET 1 OF 3

B. I. N.
7712870

DES:	DRAWN:	CHK'D:

C:\Documents and Settings\Chris\Desktop\Pelham Arch.dgn
5/29/2012 11:35:04 AM

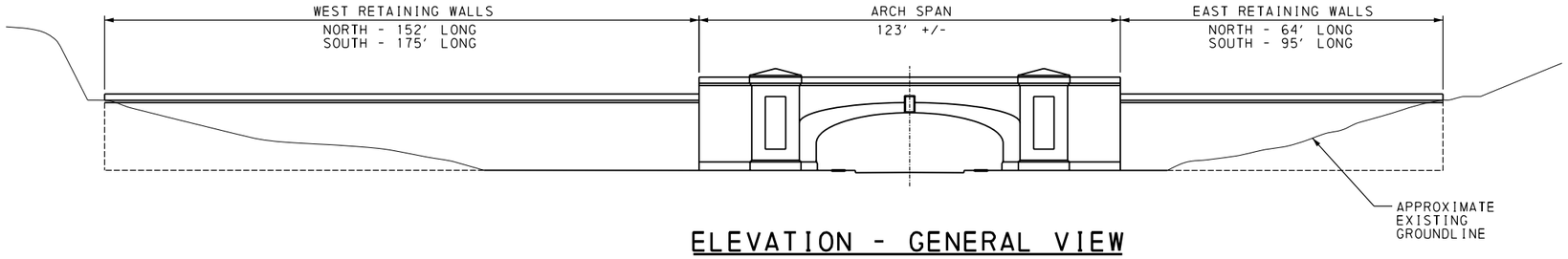

N

ELEVATION - GENERAL VIEW

(LOOKING NORTH)

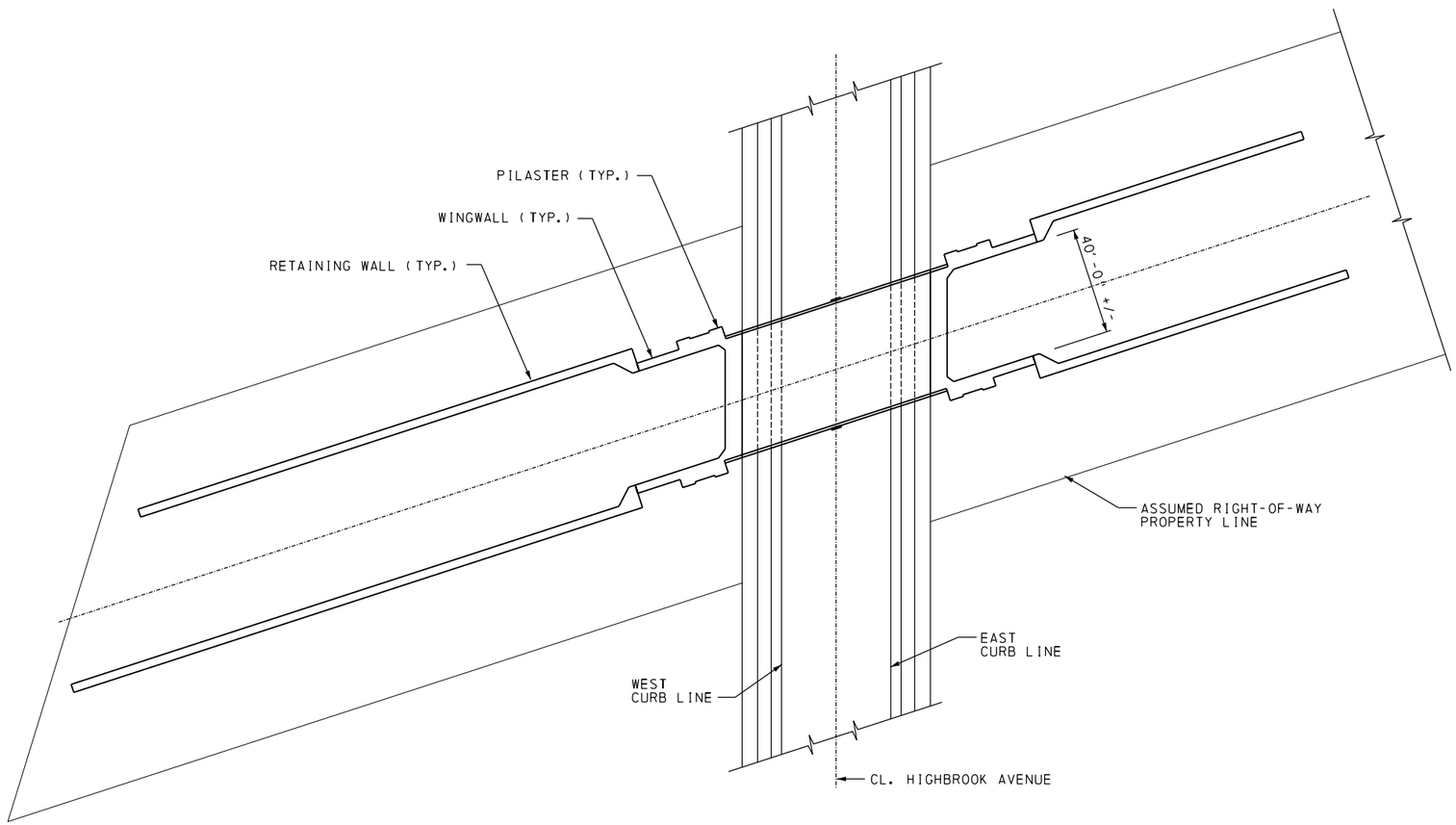

PARTIAL PLAN VIEW

(LOOKING THROUGH TO UNDERSIDE OF ARCH)

NOT TO SCALE

APPENDIX B - PAGE B2

C:\Documents and Settings\Chris\Desktop\Pelham Arch.dgn
5/29/2012 11:35:53 AM

DES:	DRAWN:	CHK'D:

VILLAGE OF PELHAM
195 SPARKS AVENUE, PELHAM, NEW YORK, 10803

HIGHBROOK AVENUE
NEW YORK, WESTCHESTER
AND BOSTON RAILWAY BRIDGE

GENERAL VIEWS - 2

MODJESKI and MASTERS
Experience great bridges.

SHEET 2 OF 3

B.I.N.
7712870

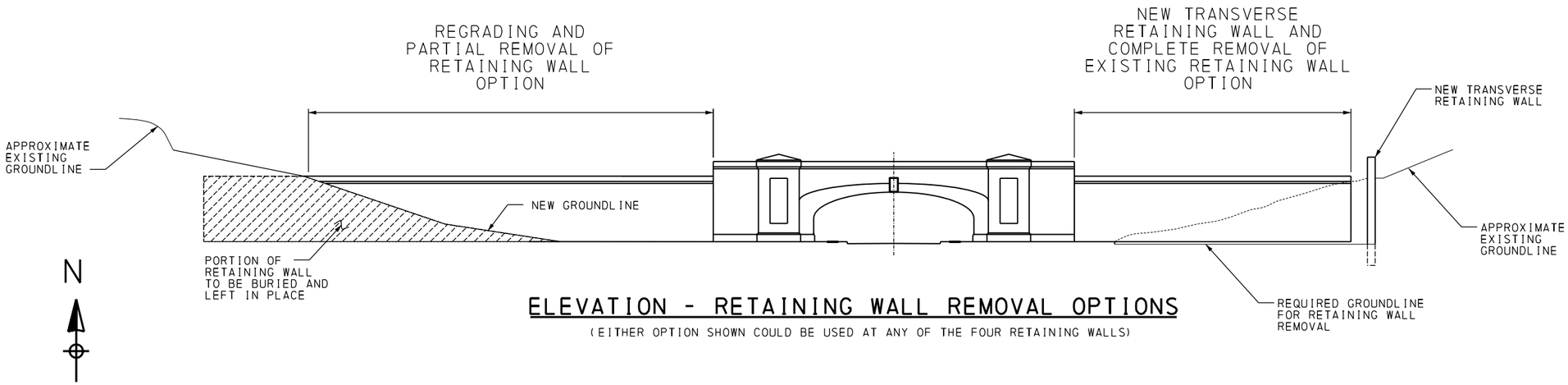

ELEVATION - RETAINING WALL REMOVAL OPTIONS

(EITHER OPTION SHOWN COULD BE USED AT ANY OF THE FOUR RETAINING WALLS)

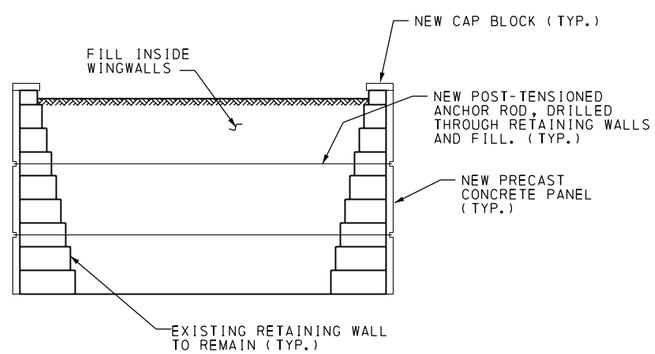

RETAINING WALL RESTORATION OPTION

NOT TO SCALE

VILLAGE OF PELHAM
195 SPARKS AVENUE, PELHAM, NEW YORK, 10803

HIGHBROOK AVENUE
NEW YORK, WESTCHESTER
AND BOSTON RAILWAY BRIDGE

GENERAL VIEWS - 3

MODJESKI and MASTERS
Experience great bridges.

SHEET 3 OF 3

B. I. N.
7712870

$TIME$
$FILEL$
$DATE$

DES: | DRAWN: | CHK'D:

APPENDIX C

PHOTOGRAPHS

VILLAGE OF PELHAM - 195 Sparks Avenue, Pelham, NY, 10803

2012 BRIDGE INSPECTION PHOTOGRAPHS

B.I.N.: 7712870 **CARRIERS:** New York, Westchester and Boston Railway Bridge

OVER: Highbrook Avenue

Photograph No. 1 – South Elevation (Looking North)

Photograph No. 2 – North Elevation (Looking South)

VILLAGE OF PELHAM - 195 Sparks Avenue, Pelham, NY, 10803

2012 BRIDGE INSPECTION PHOTOGRAPHS

B.I.N.: 7712870 **CARRIERS:** New York, Westchester and Boston Railway Bridge

OVER: Highbrook Avenue

Photograph No. 3 – Southwest Retaining Wall (Looking Northwest)

Photograph No. 4 – Southeast Retaining Wall (Looking Northwest)

VILLAGE OF PELHAM - 195 Sparks Avenue, Pelham, NY, 10803

2012 BRIDGE INSPECTION PHOTOGRAPHS

B.I.N.: 7712870 **CARRIERS:** New York, Westchester and Boston Railway Bridge

OVER: Highbrook Avenue

Photograph No. 5 – Northeast Retaining Wall (Looking Southeast)

Photograph No. 6 – Northwest Retaining Wall (Looking Southeast)

VILLAGE OF PELHAM - 195 Sparks Avenue, Pelham, NY, 10803

2012 BRIDGE INSPECTION PHOTOGRAPHS

B.I.N.: 7712870 **CARRIERS:** New York, Westchester and Boston Railway Bridge

OVER: Highbrook Avenue

Photograph No. 7 – East End of Structure (Looking West)

Photograph No. 8 – Top Side of Arch Span (Looking West)

VILLAGE OF PELHAM - 195 Sparks Avenue, Pelham, NY, 10803

2012 BRIDGE INSPECTION PHOTOGRAPHS

B.I.N.: 7712870 **CARRIERS:** New York, Westchester and Boston Railway Bridge

OVER: Highbrook Avenue

Photograph No. 9 – Top Side of West Retaining Walls (Looking East)

Photograph No. 10 – Underside of Arch (Looking East)

VILLAGE OF PELHAM - 195 Sparks Avenue, Pelham, NY, 10803

2012 BRIDGE INSPECTION PHOTOGRAPHS

B.I.N.: 7712870 **CARRIERS:** New York, Westchester and Boston Railway Bridge

OVER: Highbrook Avenue

Photograph No. 11 – Loose, Deteriorated Concrete on North Arch Fascia and Spandrel Wall (Looking Southwest)

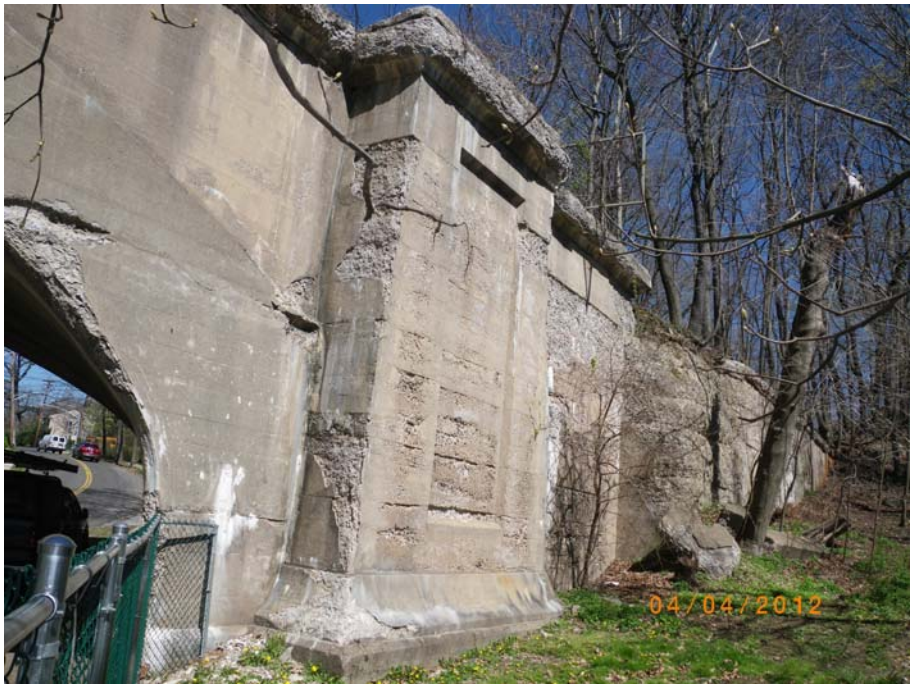

Photograph No. 12 – Loose, Deteriorated Concrete on Southeast Pilaster (Looking Northeast)

VILLAGE OF PELHAM - 195 Sparks Avenue, Pelham, NY, 10803

2012 BRIDGE INSPECTION PHOTOGRAPHS

B.I.N.: 7712870 **CARRIERS:** New York, Westchester and Boston Railway Bridge

OVER: Highbrook Avenue

Photograph No. 13 – Deteriorated Concrete on Top Cap Block on Arch Span (Looking North)

Photograph No. 14 – Localized Spalled Concrete on the Underside of the Arch (Looking Northeast)

VILLAGE OF PELHAM - 195 Sparks Avenue, Pelham, NY, 10803

2012 BRIDGE INSPECTION PHOTOGRAPHS

B.I.N.: 7712870 **CARRIERS:** New York, Westchester and Boston Railway Bridge

OVER: Highbrook Avenue

Photograph No. 15 – Severely Deteriorated Concrete on Southeast Retaining Wal (Looking Northeast)

Photograph No. 16 – Southwest Retaining Wall with Delaminating Parging with Efflorescence (Looking Northwest)

2012 BRIDGE INSPECTION PHOTOGRAPHS

B.I.N.: 7712870 **CARRIERS:** New York, Westchester and Boston Railway Bridge

OVER: Highbrook Avenue

Photograph No. 17 – Northwest Retaining Wall with Severely Deteriorated Concrete and Section of Fallen Cap Block (Looking Southwest)

Photograph No. 18 – Severely Deteriorated Surface Concrete on Northwest Pilaster (Looking Southeast)

2012 BRIDGE INSPECTION PHOTOGRAPHS

B.I.N.: 7712870 **CARRIERS:** New York, Westchester and Boston Railway Bridge

OVER: Highbrook Avenue

Photograph No. 19 – Northwest Retaining Wall with Dense Vegetation Growth (Looking South)

Photograph No. 20 – Northeast Pilaster with Deteriorated Concrete and Delaminated Parging (Looking Southwest)

VILLAGE OF PELHAM - 195 Sparks Avenue, Pelham, NY, 10803

2012 BRIDGE INSPECTION PHOTOGRAPHS

B.I.N.: 7712870 **CARRIERS:** New York, Westchester and Boston Railway Bridge

OVER: Highbrook Avenue

Photograph No. 21 – Large Stone Aggregate in Southwest Pilaster Concrete (Looking North)

Photograph No. 22 – East End of Structure (Looking East from Fill between East Retaining Walls)

VILLAGE OF PELHAM - 195 Sparks Avenue, Pelham, NY, 10803

2012 BRIDGE INSPECTION PHOTOGRAPHS

B.I.N.: 7712870 **CARRIERS:** New York, Westchester and Boston Railway Bridge

OVER: Highbrook Avenue

Photograph No. 23 – End of Southeast Retaining Wall (Looking West)

Photograph No. 24 – East of Southwest Retaining Wall (Looking North)

APPENDIX D

COST ESTIMATES

HIGHBROOK AVENUE NW&B RAILWAY BRIDGE

OPTION 1A - COST ESTIMATE

ADDRESS SAFETY ISSUES AND LEAVE STRUCTURE UNUSED

Work Item	Unit	Total Quantity	Unit Cost $	Total Cost $
Maintenance of Traffic	DAY	6	1,500	9,000
Relocate Utility Lines	LS	1	5,000	5,000
Lift Truck	DAY	10	1,500	15,000
Debris removal	CY	60	200	12,000
Concrete Removal - Type A	SF	50	75	3,750
Concrete Removal - Type B	SF	650	25	16,250
Concrete Removal - Type C	LS	1	2,500	2,500
Concrete Removal - Type D	LF	180	50	9,000
Vegetation Removal	SF	3,000	3.0	9,000
Debris removal	CY	30	200	6,000
Fencing Repair	LS	1	500	500
New Fencing	LF	125	15	1,875
New Gate with Pad Lock	LS	2	1,000	2,000
SUB-TOTAL				91,875
MOBILIZATION			5%	4,594
ACCESS			5%	4,594
CONTINGENCY			10%	9,188
TOTAL				110,250

USE = $125,000

Concrete Removal

Type A - Overhead Spalled/Unsound Area (Underside of Arch)

Type B - Vertical Face Spalled/Unsound Area (Arch Fascias, Spandrel Walls and Pilasters)

Type C - Wingwall Cap Block Removal (Undermined Cap Block on Southwest Wingwall)

Type D - Cap Block Removal (Removal of 30"x30" Coped Cap Block from Pilaster to Pilaster on both North and South Sides of Bridge.)

HIGHBROOK AVENUE NW&B RAILWAY BRIDGE
OPTION 1B - COST ESTIMATE
RESTORE ARCH AND PILASTERS AND LEAVE STRUCTURE UNUSED

Work Item	Unit	Total Quantity	Unit Cost $	Total Cost $
Maintenance of Traffic	DAY	6	1,500	9,000
Relocate Utility Lines	LS	1	5,000	5,000
Lift Truck	DAY	10	1,500	15,000
Debris removal	CY	60	200	12,000
Concrete Removal - Type A	SF	50	75	3,750
Concrete Removal - Type B	SF	650	25	16,250
Concrete Removal - Type C	LS	1	2,500	2,500
Concrete Removal - Type D	LF	250	50	12,500
Concrete Repair - Type E	SF	50	500	25,000
Concrete Repair - Type F	SF	325	200	65,000
Concrete Repair - Type G	SF	1,568	100	156,750
Vegetation Removal	SF	3,000	3.0	9,000
Debris removal	CY	30	200	6,000
Fencing Repair	LS	1	500	500
New Fencing	LF	600	15	9,000
New Gate with Pad Lock	LS	2	1,000	2,000
Engineering - Plans	LS	1	25,000	25,000
SUB-TOTAL				374,250
MOBILIZATION			5%	18,713
ACCESS			5%	18,713
CONTINGENCY			10%	37,425
OVERHEAD & PROFIT			20%	74,850
TOTAL				523,950

USE = $525,000

Concrete Removal
- Type A - Overhead Spalled/Unsound Area (Underside of Arch)
- Type B - Vertical Face Spalled/Unsound Area (Arch Fascias, Spandrel Walls and Pilasters)
- Type C - Wingwall Cap Block Removal (Undermined Cap Block on Southwest Wingwall)
- Type D - Cap Block Removal (Removal of 30"x30" Coped Cap Block from Wingwall to Wingwall on both North and South Sides of Bridge and an addition 200 feet on the retaining walls)

Concrete Repair
- Type E - Overhead Spall Repair (Underside of Arch)
- Type F - Vertical Face Spall Repiar ((Arch Fascias and Spandrel Walls)
- Type G - Pilaster Concrete Repair (The quantity for this repair includes 75% of the Pilaster faces. Only a portion of the Pilaster surfaces currently contain loose/delaminated concrete, which was included in the Concrete Removal, Type B. A large portion of the remaining surfaces are still severely deteriorated and should be included in any repair work.)

HIGHBROOK AVENUE NW&B RAILWAY BRIDGE

OPTION 2A - COST ESTIMATE

RESTORE ARCH SPAN AND RETAINING WALLS - AESTHETICS AND SAFETY ONLY

Work Item	Unit	Total Quantity	Unit Cost $	Total Cost $
ARCH SPAN				
Maintenance of Traffic	DAY	6	1,500	9,000
Relocate Utility Lines	LS	1	5,000	5,000
Lift Truck	DAY	10	1,500	15,000
Debris removal	CY	60	200	12,000
Concrete Removal - Type A	SF	50	75	3,750
Concrete Removal - Type B	SF	1,425	25	35,625
Concrete Removal - Type C	LS	1	2,500	2,500
Concrete Removal - Type D	LF	250	50	12,500
Concrete Repair - Type E	SF	50	500	25,000
Concrete Repair - Type F	SF	325	200	65,000
Concrete Repair - Type G	SF	2,846	100	284,625
RETAINING WALLS				
Vegetation Removal	LS	1	10,000	10,000
Cap Block Removal	LF	485	50	24,250
Partial Excavation	CY	75	150	11,250
New Precast Panels	SF	7,300	100	730,000
Drilling Anchors	EA	55	500	27,625
Tensioning Anchors	EA	55	250	13,750
New Cap Block	LF	485	100	48,500
Regrading	CY	500	100	50,000
FENCING				
Vegetation Removal	SF	3,000	3.0	9,000
Debris removal	CY	30	200	6,000
Fencing Repair	LS	1	500	500
New Fencing	LF	600	15	9,000
New Gate with Pad Lock	LS	2	1,000	2,000
ENGINEERING COSTS				
Engineering - Plans	LS	1	30,000	30,000
Surveying and Evaluation	LS	1	60,000	60,000
SUB-TOTAL				1,501,875
MOBILIZATION			5%	75,094
ACCESS			5%	75,094
CONTINGENCY			10%	150,188
OVERHEAD & PROFIT			20%	300,375
TOTAL				2,102,625

USE = $2,125,000

Concrete Removal

Type A - Overhead Spalled/Unsound Area (Underside of Arch)

Type B - Vertical Face Spalled/Unsound Area (Arch Fascias, Spandrel Walls, Pilasters and Wingwalls)

Type C - Wingwall Cap Block Removal (Undermined Cap Block on Southwest Wingwall)

Type D - Cap Block Removal (Removal of 30"x30" Coped Cap Block from Wingwall to Wingwall on both North and South Sides of Bridge.)

Concrete Repair

Type E - Overhead Spall Repair (Underside of Arch)

Type F - Vertical Face Spall Repiar ((Arch Fascias and Spandrel Walls)

Type G - Pilaster and Wingwall Concrete Repair (The quantity for this repair includes 75% of the Pilaster and Wingwall faces. Only a portion of the surfaces currently contain loose/delaminated concrete, which was included in the Concrete Removal, Type B. A large portion of the remaining surfaces are still severely deteriorated and should be included in any repair work.)

HIGHBROOK AVENUE NW&B RAILWAY BRIDGE
OPTION 2B - COST ESTIMATE
RESTORE ARCH SPAN AND RETAINING WALLS - PEDESTRIAN USE

Work Item	Unit	Total Quantity	Unit Cost $	Total Cost $
ARCH SPAN (See Above)				
Repairs to Arch Span	LS	1	470,000	470,000
RETAINING WALLS (See Above)				
Retrofits to Retaining Walls	LS	1	915,375	915,375
PEDESTRIAN USE				
Construct Pathways up to Top	LS	1	10,000	10,000
Install Stairways	LS	1	15,000	15,000
Install Pedestrian Railing	LF	735	100	73,500
Extensive Vegetation Removal	SF	8,700	25	217,500
1 ft Deep Clean Fill	CY	325	70	22,750
ENGINEERING COSTS				
Engineering - Plans	LS	1	35,000	35,000
Surveying and Evaluation	LS	1	60,000	60,000
SUB-TOTAL				1,819,125
MOBILIZATION			5%	90,956
ACCESS			5%	90,956
CONTINGENCY			10%	181,913
OVERHEAD & PROFIT			20%	363,825
TOTAL				2,546,775

USE = $2,550,000

HIGHBROOK AVENUE NW&B RAILWAY BRIDGE

OPTION 3A - COST ESTIMATE

RESTORE ARCH SPAN - AESTHETICS AND SAFETY ONLY

Work Item	Unit	Total Quantity	Unit Cost $	Total Cost $
ARCH SPAN				
Maintenance of Traffic	DAY	6	1,500	9,000
Relocate Utility Lines	LS	1	5,000	5,000
Lift Truck	DAY	10	1,500	15,000
Debris removal	CY	60	200	12,000
Concrete Removal - Type A	SF	50	75	3,750
Concrete Removal - Type B	SF	1,425	25	35,625
Concrete Removal - Type C	LS	1	2,500	2,500
Concrete Removal - Type D	LF	250	50	12,500
Concrete Repair - Type E	SF	50	500	25,000
Concrete Repair - Type F	SF	325	200	65,000
Concrete Repair - Type G	SF	2,846	100	284,625
REMOVAL OF RETAINING WALLS				
Removal of Retaining Walls	LS	1	1,450,000	1,450,000
ENGINEERING COSTS				
Engineering - Plans	LS	1	30,000	30,000
Surveying and Evaluation	LS	1	60,000	60,000
SUB-TOTAL				2,010,000
MOBILIZATION			5%	100,500
ACCESS			5%	100,500
CONTINGENCY			10%	201,000
OVERHEAD & PROFIT			20%	402,000
TOTAL				2,814,000

USE = $2,825,000

Concrete Removal

Type A - Overhead Spalled/Unsound Area (Underside of Arch)

Type B - Vertical Face Spalled/Unsound Area (Arch Fascias, Spandrel Walls, Pilasters and Wingwalls)

Type C - Wingwall Cap Block Removal (Undermined Cap Block on Southwest Wingwall)

Type D - Cap Block Removal (Removal of 30"x30" Coped Cap Block from Wingwall to Wingwall on both North and South Sides of Bridge.)

Concrete Repair

Type E - Overhead Spall Repair (Underside of Arch)

Type F - Vertical Face Spall Repiar ((Arch Fascias and Spandrel Walls)

Type G - Pilaster and Wingwall Concrete Repair (The quantity for this repair includes 75% of the Pilaster and Wingwall faces. Only a portion of the surfaces currently contain loose/delaminated concrete, which was included in the Concrete Removal, Type B. A large portion of the remaining surfaces are still severely deteriorated and should be included in any repair work.)

HIGHBROOK AVENUE NW&B RAILWAY BRIDGE
OPTION 3B - COST ESTIMATE
RESTORE ARCH SPAN - PEDESTRIAN USE

Work Item	Unit	Total Quantity	Unit Cost $	Total Cost $
ARCH SPAN (See Above)				
Repairs to Arch Span	LS	1	470,000	470,000
RETAINING WALLS				
Removal of Retaining Walls	LS	1	1,450,000	1,450,000
PEDESTRIAN USE				
Construct Pathways up to Top	LS	1	5,000	5,000
Install Stairways	LS	1	25,000	25,000
Install Pedestrian Railing	LF	250	100	25,000
Extensive Vegetation Removal	SF	4,375	25	109,375
1 ft Deep Clean Fill	CY	162	70	11,343
ENGINEERING COSTS				
Engineering - Plans	LS	1	40,000	40,000
Surveying and Evaluation	LS	1	60,000	60,000
SUB-TOTAL				2,195,718
MOBILIZATION			5%	109,786
ACCESS			5%	109,786
CONTINGENCY			10%	219,572
OVERHEAD & PROFIT			20%	439,144
TOTAL				3,074,005

USE = $3,075,000

HIGHBROOK AVENUE NW&B RAILWAY BRIDGE
RETAINING WALL REMOVAL - WORK ITEM COST ESTIMATE
FOR OPTIONS 3A AND 3B

Work Item	Unit	Total Quantity	Unit Cost $	Total Cost $
Vegetation Removal	SF	10,800	3	32,400
Debris/Soil removal	CY	4,000	25	100,000
Hazardous Material Removal	CY	1,000	150	150,000
Erosion Control	SY	1,200	4	4,800
Removal/Modification of Drainage	LS	1	2,500	2,500
Re-Grading Slope	SF	10,800	1	10,800
Topsoil Placement	CY	100	70	7,000
New Transverse Retaining Walls	SF	3,500	60	210,000
Maintenance of Traffic	DAY	10	1,500	15,000
Concrete Removal - Type C	CY	1,190	400	476,000
Foundation Removal - Type F	CY	435	1,000	435,000
SUB-TOTAL				1,443,500

USE = $1,450,000

Concrete Removal:
Type C - Retaining walls

Foundation Removal:
Type F - Retaining walls Foundation

HIGHBROOK AVENUE NW&B RAILWAY BRIDGE
OPTION 4 - COST ESTIMATE
REMOVAL OF ENTIRE STRUCTURE

Work Item	Unit	Total Quantity	Unit Cost $	Total Cost $
Vegetation Removal	SF	15,700	3	47,100
Debris/Soil removal	CY	6,400	25	160,000
Hazardous Material Removal	CY	1,600	150	240,000
Erosion Control	SY	1,200	4	4,800
Removal/Modification of Drainage	LS	1	2,500	2,500
Re-Grading Slope	SF	13,200	1	13,200
Topsoil Placement	CY	150	70	10,500
New Transverse Retaining Walls	SF	1,500	75	112,500
Maintenance of Traffic	DAY	10	1,500	15,000
Relocate Utility Lines	LS	1	5,000	5,000
Concrete Removal - Type A	CY	75	400	30,000
Concrete Removal - Type B	CY	595	400	238,000
Concrete Removal - Type C	CY	1,190	400	476,000
Concrete Removal - Type D	CY	600	800	480,000
Foundation Removal - Type E	CY	140	1,000	140,000
Foundation Removal - Type F	CY	435	1,000	435,000
Surveying and Evaluation	LS	1	60,000	60,000
Engineering - Plans	LS	1	40,000	40,000
Historical Documentation	LS	1	10,000	10,000
SUB-TOTAL				2,519,600
MOBILIZATION			5%	125,980
ACCESS			5%	125,980
CONTINGENCY			10%	251,960
TOTAL				3,023,520

USE = $3,025,000

Concrete Removal:
- Type A - Sprandrel Walls
- Type B - Pilasters and Wingwalls
- Type C - Retaining walls
- Type D - Arch

Foundation Removal:
- Type E - Pilasters and Wingwalls Foundation
- Type F - Retaining walls Foundation

APPENDIX E

MAY 4, 2012 LETTER

SUMMARY REPORT OF POTENTIAL SAFETY HAZARDS

MODJESKI and MASTERS
Experience great bridges.

CHARLESTON **WV** | EDWARDSVILLE **IL** | MECHANICSBURG **PA** | MOORESTOWN **NJ** | NEW ORLEANS **LA**
PHILADELPHIA **PA** | POUGHKEEPSIE **NY** | ST LOUIS **MO** | WASHINGTON **DC**

May 4, 2012

Mr. Robert Yamuder
Village of Pelham
195 Sparks Avenue
Pelham, NY 10803

RE: PN3168
STUDY AND RECOMMENDATIONS PERTAINING TO THE HIGHBROOK AVENUE NYW&B RAILWAY BRIDGE
Summary Report on the Potential Safety Hazards

Dear Mr. Yamuder:

On April 4 and 5, 2012, Christopher P. Ahlskog, P.E. and Michael D. Clauser, EIT of Modjeski and Masters, Inc. (M&M), performed an inspection of the Highbrook Avenue NYW&B Railway Bridge. This letter provides a brief summary of potential safety hazard areas that were observed during this inspection and recommendations to reduce those potential safety hazards.

There were two main types of safety hazards observed:

1. Loose (spalled, unsound, and delaminated) concrete sections located above or near the roadway and sidewalks and

2. Access to the top side of the bridge and retaining walls.

Portions of these loose concrete sections could easily fall and injure pedestrians or motorists and/or cause damage to vehicles. These areas with loose concrete have been identified in the attached sketches and photographs. From our observations, the loose concrete sections directly above the roadway or sidewalk are not likely to result in large falling pieces of concrete, but any that may fall could still result in injury or property damage. We strongly recommend that in the immediate future the Village of Pelham maintenance personnel or their contractor break off the loose sections of concrete above the roadway and sidewalks areas using a hammer and compressed air. For the near term, this action should virtually eliminate the potential of loose concrete failing on the sidewalks or roadway. If the Village of Pelham is considering keeping the structure, then as soon as practical but no later than the end of October 2012 (i.e. before cold weather sets in), these areas should be repaired to prevent further deterioration of the concrete. Concrete repair plans should be developed using partial depth concrete repairs similar to those given in the attached standard concrete repair drawing. Additional deteriorated concrete removal will likely be required to execute these repairs. If the Village of Pelham does not perform the concrete repairs, then at least once a year the procedure of removing loose concrete should be performed. Another option, after the initial loose concrete is removed, would be to install protective netting to the structure to prevent future concrete debris from falling on the sidewalks or roadway.

We have developed the following preliminary cost estimates for these three items (see attachments fro cost estimate details):

1. Concrete Removal ($85,000) - Initial loose concrete removal and removal of undermined cap block section on the southwest wingwall.

2. Debris Netting ($105,000) - Installation of debris netting placed on the underside and fascias of the arch, on the spandrel walls and on the vertical faces of the pilasters.

3. Concrete Repair ($365,000) - Repairing the areas with deteriorated concrete on the arch span and pilasters.

The second type of hazard involves access to the top side of the bridge and retaining walls. Even though they have a height approaching 25 feet, there is no fall-protection measures along the top of the retaining walls. Any pedestrian traffic on the top of the retaining wall fill is at risk of falling, particularly due to the uneven sloping fill and heavy vegetation growth. There is also a hole in the protective fencing on the top of the bridge near the southwest pilaster. This hole allows easy access to the top of the bridge. This hole in the fencing is near the severely undermined cap block section on the southwest retaining wall. The hazard of this section of cap block falling is not apparent from the top of the structure. We recommend that in the immediate future the Village of Pelham maintenance personnel or their contractor repair the hole in the fence near the southwest pilaster and remove the severely undermined cap block section on the southwest retaining wall. Also in the near future, the Village of Pelham should consider adding fencing along the top inside face of the retaining walls to prevent pedestrians from falling off the side of the retaining walls. In order to place fencing in this area, some trees near this edge will need to be removed. A preliminary cost estimate for installing this addition fencing is $40,000 (see attachment for cost estimate details).

This letter provides options to address potential safety hazards in the near term. A report providing options for the long term maintenance of the structure or removal of the structure is being developed.

If you have any questions concerning these issues, please contact us.

Very truly yours,

Scott R. Eshenaur, P.E.,
Senior Associate

SRE:CPA:lsp

encl. Identification of Potential Safety Hazard Areas
Sketches (2 – Pages)
Photographs (11 – Pages)
Standard Concrete Repair Drawing
Preliminary Cost Estimates (4 – Pages)

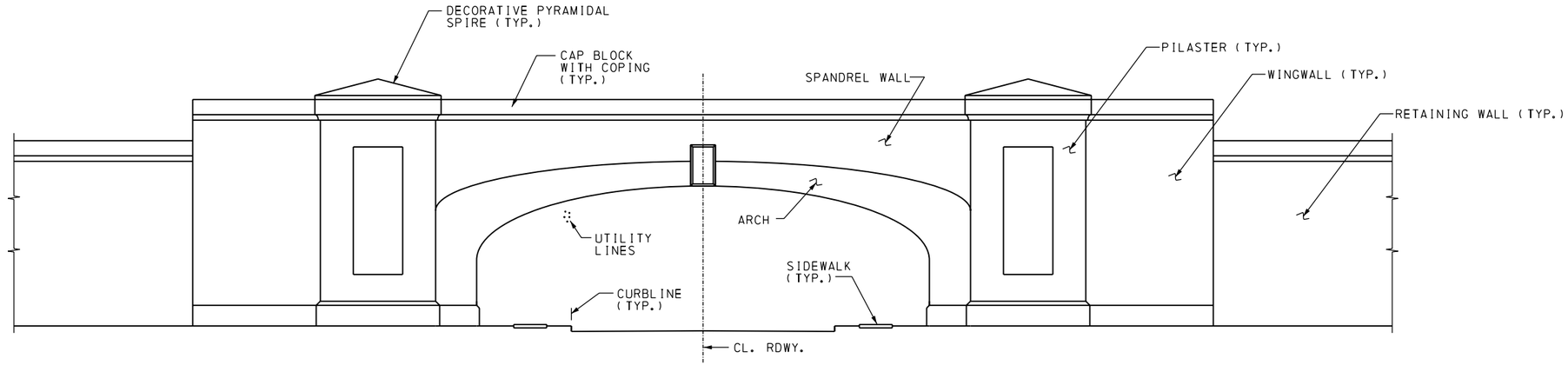

ELEVATION - GENERAL VIEW

(LOOKING NORTH)

NOTES:

Ⓐ — 0.5'x4' SPALLED AREA WITH LOOSE AND UNSOUND CONCRETE ALONG PERIMETER (SEE PHOTOGRAPH NO. 3)

Ⓑ — 12 SF AREA OF FAILING PATCH REPAIR (SEE PHOTOGRAPH NO. 4)

Ⓒ — 1 SF AREA OF DELAMINATED CONCRETE (SEE PHOTOGRAPH NO. 5)

Ⓓ — 0.5'x4' SPALLED AREA WITH LOOSE AND UNSOUND CONCRETE ALONG PERIMETER (SEE PHOTOGRAPH NO. 6)

Ⓔ — 1'x10' AREA WITH UNSOUND CONCRETE SMALL DELAMINATED AREAS THROUGHOUT (SEE PHOTOGRAPH NO. 7)

Ⓡ — HOLE IN FENCING (SEE PHOTOGRAPH NO. 18)

Ⓢ — NO FALL PROTECTION MEASURES ALONG RETAINING WALLS WITH UP TO 25' HEIGHT (TYP.) (SEE PHOTOGRAPH NOS. 19 THRU 21)

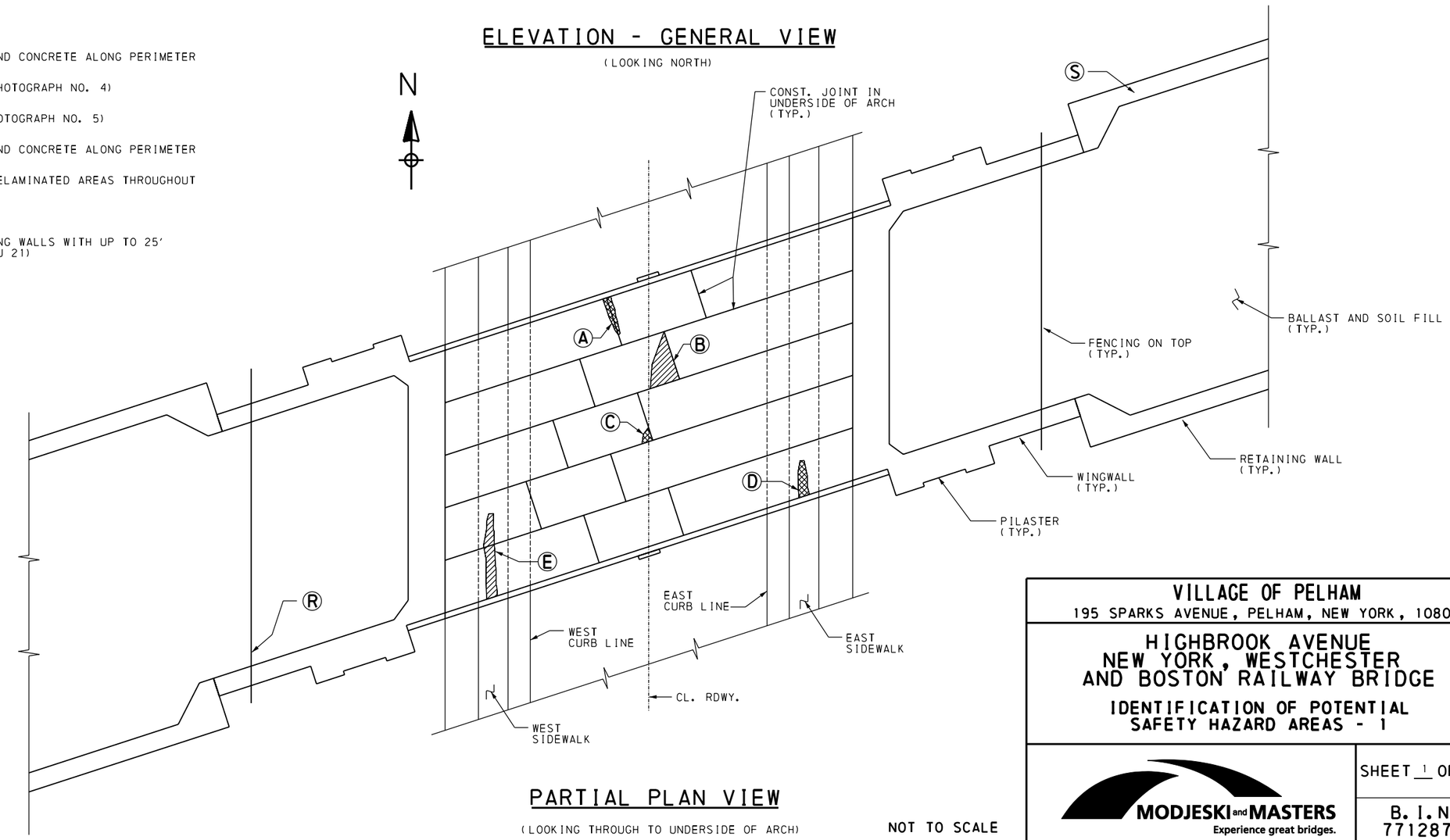

PARTIAL PLAN VIEW

(LOOKING THROUGH TO UNDERSIDE OF ARCH)

NOT TO SCALE

VILLAGE OF PELHAM
195 SPARKS AVENUE, PELHAM, NEW YORK, 10803

HIGHBROOK AVENUE
NEW YORK, WESTCHESTER
AND BOSTON RAILWAY BRIDGE

IDENTIFICATION OF POTENTIAL
SAFETY HAZARD AREAS - 1

MODJESKI and MASTERS
Experience great bridges.

SHEET 1 OF 2

B. I. N.
7712870

$TIME$
$FILEL$
$DATE$

DES:	DRAWN:	CHK'D:

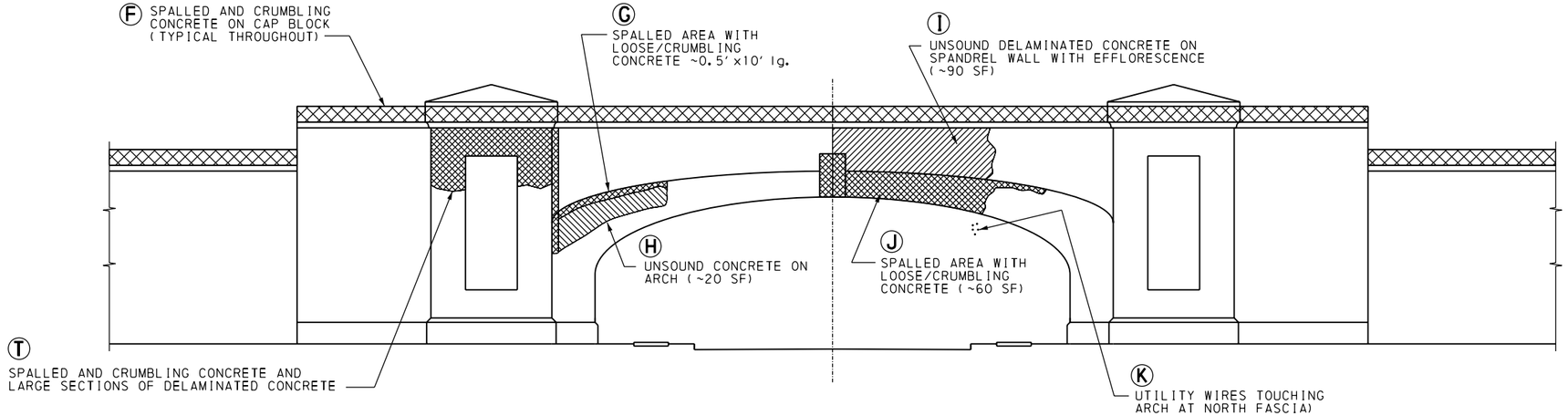

ELEVATION - NORTH FASCIA

(LOOKING SOUTH)

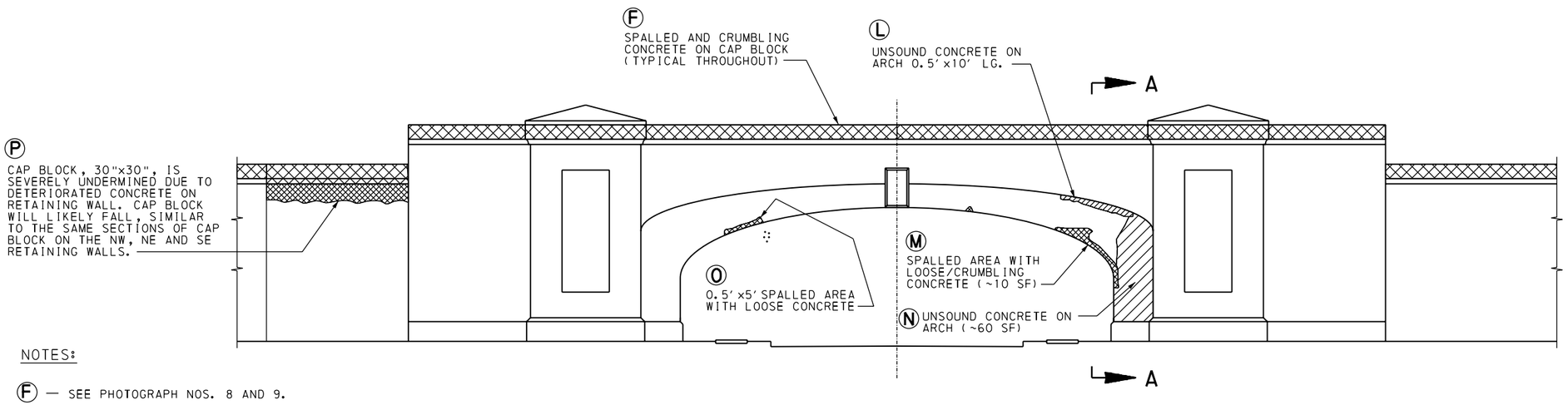

ELEVATION - SOUTH FASCIA

(LOOKING NORTH)

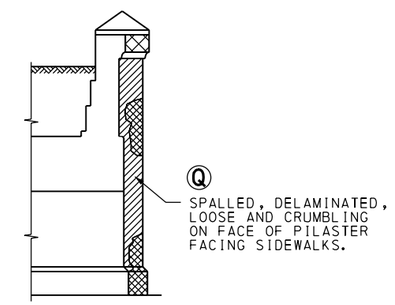

SECTION A-A

(SE PILASTER SHOWN, SIMILAR AT SW, NW AND NE PILASTERS)

NOTES:

- F — SEE PHOTOGRAPH NOS. 8 AND 9.
- G — SEE PHOTOGRAPH NO. 10.
- H — SEE PHOTOGRAPH NO. 10.
- I — SEE PHOTOGRAPH NOS. 11 AND 12.
- J — SEE PHOTOGRAPH NOS. 11 AND 12.
- K — SEE PHOTOGRAPH NO. 13.
- L — SEE PHOTOGRAPH NO. 14.
- M — SEE PHOTOGRAPH NO. 14.
- N — SEE PHOTOGRAPH NO. 14.
- O — SEE PHOTOGRAPH NO. 15.
- P — SEE PHOTOGRAPH NO. 16.
- Q — SEE PHOTOGRAPH NO. 17.
- T — SEE PHOTOGRAPH NO. 22.

NOT TO SCALE

VILLAGE OF PELHAM
195 SPARKS AVENUE, PELHAM, NEW YORK, 10803

HIGHBROOK AVENUE
NEW YORK, WESTCHESTER
AND BOSTON RAILWAY BRIDGE

IDENTIFICATION OF POTENTIAL
SAFETY HAZARD AREAS - 2

MODJESKI and MASTERS
Experience great bridges.

SHEET 2 OF 2

B. I. N.
7712870

$TIME$
$FILEL$
$DATE$

DES:	DRAWN:	CHK'D:

VILLAGE OF PELHAM - 195 Sparks Avenue, Pelham, NY, 10803

2012 BRIDGE INSPECTION PHOTOGRAPHS

B.I.N.: 7712870 **CARRIERS:** New York, Westchester and Boston Railway Bridge

OVER: Highbrook Avenue

Photograph No. 1 – South Elevation (Looking North)

Photograph No. 2 – North Elevation (Looking South)

MODJESKI and MASTERS
Experience great bridges.

VILLAGE OF PELHAM - 195 Sparks Avenue, Pelham, NY, 10803

2012 BRIDGE INSPECTION PHOTOGRAPHS

B.I.N.: 7712870 **CARRIERS:** New York, Westchester and Boston Railway Bridge

OVER: Highbrook Avenue

Photograph No. 3 – Underside of Arch near Center of North Fascia (Looking NW)
6" x 4' Long Spall with Loose and Unsound Concrete Around the Perimeter

Photograph No. 4 – Underside of Arch Above Centerline of Roadway (Looking West)
12 Square Foot Failing Concrete Repaired Area

MODJESKI and MASTERS
Experience great bridges.

VILLAGE OF PELHAM - 195 Sparks Avenue, Pelham, NY, 10803

2012 BRIDGE INSPECTION PHOTOGRAPHS

B.I.N.: 7712870 **CARRIERS:** New York, Westchester and Boston Railway Bridge

OVER: Highbrook Avenue

Photograph No. 5 – Underside of Arch Above Centerline of Roadway (Looking NW)
1 Square Foot Delaminated Concrete Repaired Area

Photograph No. 6 – Underside of Arch over East Sidewalk at S. Fascia (Looking SE)
6" x 4' Long Spalled Area With Unsound Concrete

MODJESKI and MASTERS
Experience great bridges.

VILLAGE OF PELHAM - 195 Sparks Avenue, Pelham, NY, 10803

2012 BRIDGE INSPECTION PHOTOGRAPHS

B.I.N.: 7712870 **CARRIERS:** New York, Westchester and Boston Railway Bridge

OVER: Highbrook Avenue

Photograph No. 7 – Underside of Arch over West Sidewalk at S. Fascia (Looking NE)
1' x 10' Long Area with Spalled and Unsound Concrete

Photograph No. 8 – Spalled Cap Block With Loose and Crumbling Concrete
(Above South Spandrel Wall, Looking NE, Shown, Typical Throughout)

MODJESKI and MASTERS
Experience great bridges.

VILLAGE OF PELHAM - 195 Sparks Avenue, Pelham, NY, 10803

2012 BRIDGE INSPECTION PHOTOGRAPHS

B.I.N.: 7712870 **CARRIERS:** New York, Westchester and Boston Railway Bridge

OVER: Highbrook Avenue

Photograph No. 9 – Spalled Cap Block With Loose and Crumbling Concrete (Above South Spandrel Wall, Looking South, Shown, Typical Throughout)

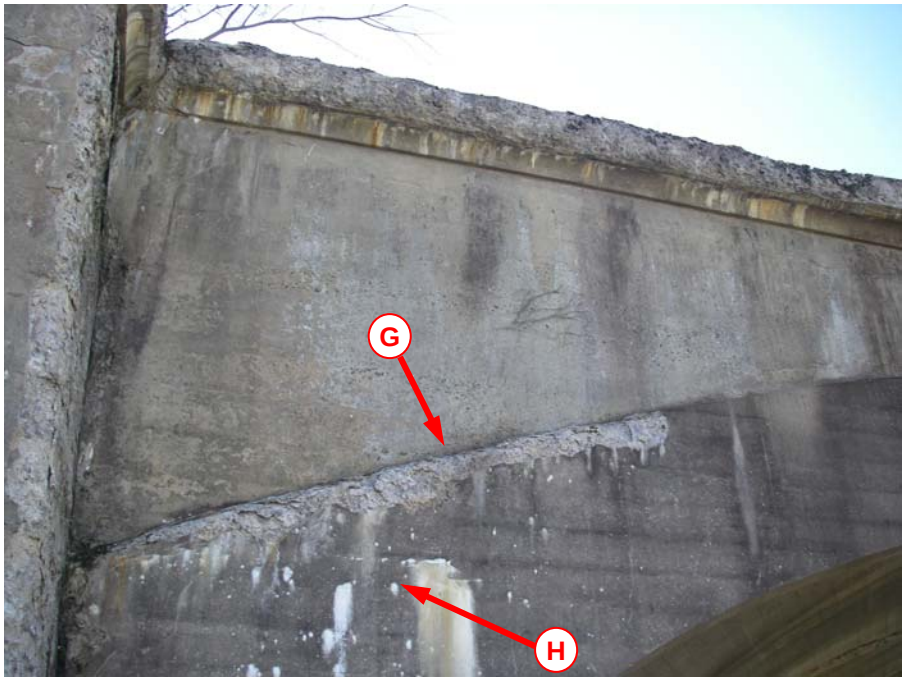

Photograph No. 10 – North Arch Fascia at NE Corner (Looking South)
G – 6" H x 10' Long Spalled Area with Loose and Crumbling Concrete
H – 20 SF Area with Unsound Concrete Below Spalled Area

MODJESKI and MASTERS
Experience great bridges.

VILLAGE OF PELHAM - 195 Sparks Avenue, Pelham, NY, 10803

2012 BRIDGE INSPECTION PHOTOGRAPHS

B.I.N.: 7712870 **CARRIERS:** New York, Westchester and Boston Railway Bridge

OVER: Highbrook Avenue

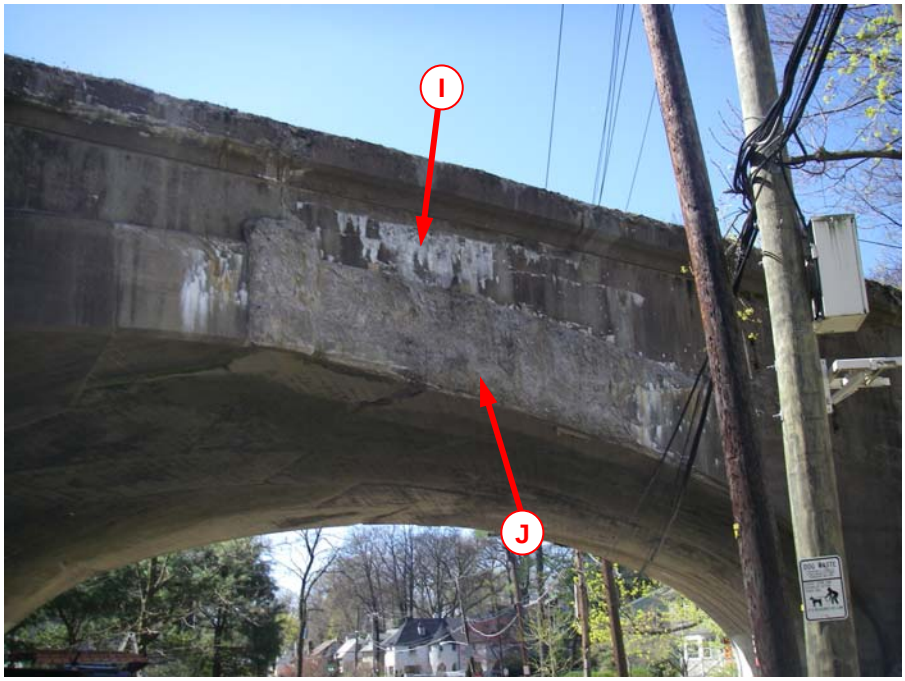

Photograph No. 11 – North Arch Fascia from CL to Curbline (Looking South)
I – 90 SF with Unsound and Delaminated Concrete with Efflorescence
J – 60 SF Spalled Area with Loose and Crumbling Concrete

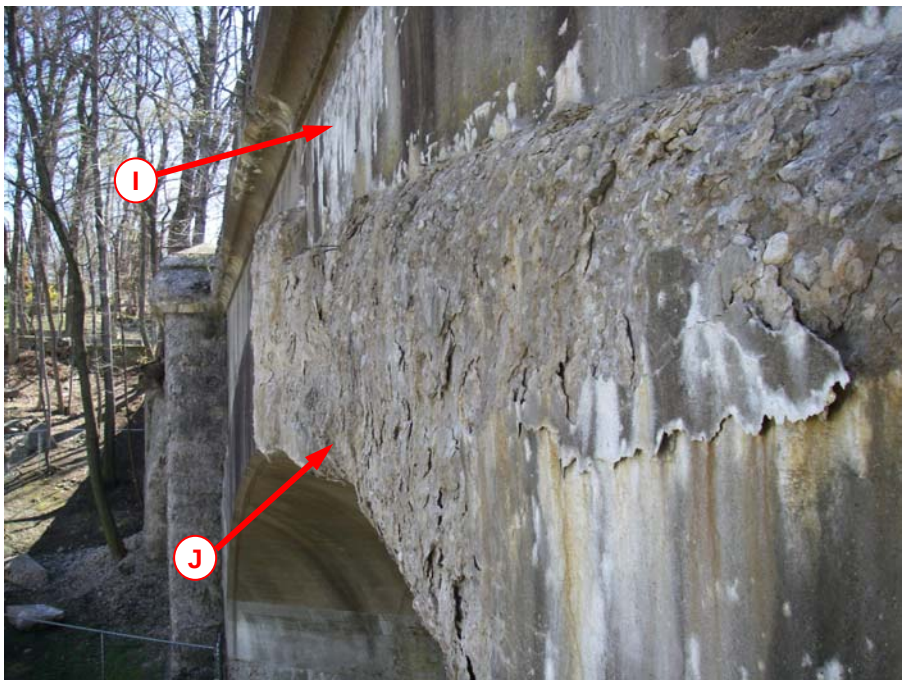

Photograph No. 12 – North Arch Fascia from CL to Curbline (Closeup, Looking SE)
I – 90 SF with Unsound and Delaminated Concrete with Efflorescence
J – 60 SF Spalled Area with Loose and Crumbling Concrete

VILLAGE OF PELHAM - 195 Sparks Avenue, Pelham, NY, 10803

2012 BRIDGE INSPECTION PHOTOGRAPHS

B.I.N.: 7712870 **CARRIERS:** New York, Westchester and Boston Railway Bridge

OVER: Highbrook Avenue

Photograph No. 13 – North Arch Fascia Above West Curbline (Looking SE)
Utility Lines in Contact with Underside of Arch

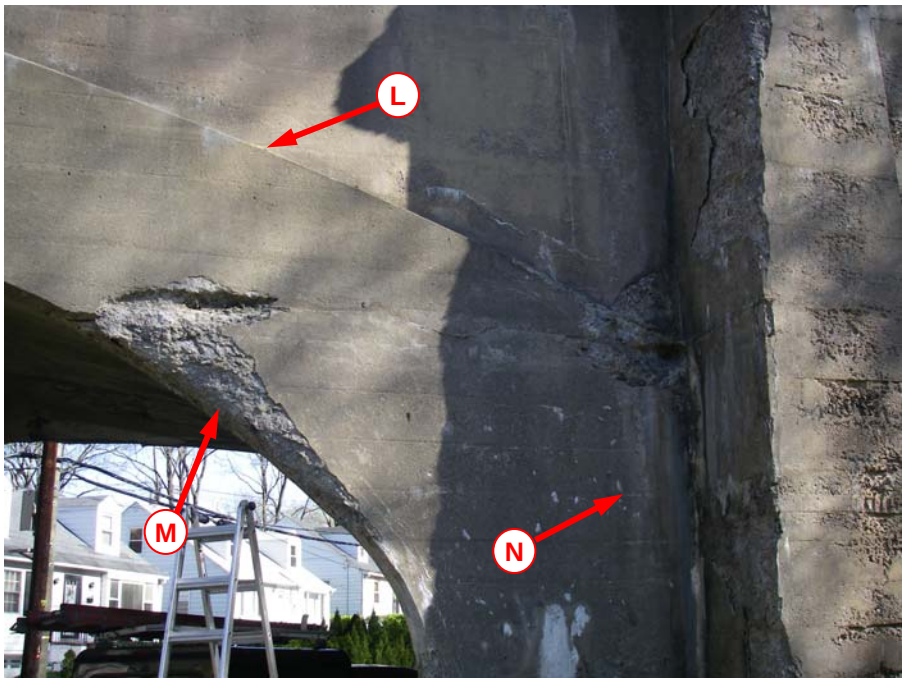

Photograph No. 14 – South Arch Fascia at SE Corner (Looking North)
L – 6" H x 10' Long Area of Unsound Concrete on Top Edge of Arch
M – 10 SF Spalled Area with Loose and Crumbling Concrete
N – 16 SF Area of Unsound Concrete on Top of Vertical Leg of Arch

MODJESKI and MASTERS
Experience great bridges.

VILLAGE OF PELHAM - 195 Sparks Avenue, Pelham, NY, 10803

2012 BRIDGE INSPECTION PHOTOGRAPHS

B.I.N.: 7712870 **CARRIERS:** New York, Westchester and Boston Railway Bridge

OVER: Highbrook Avenue

Photograph No. 15 – 6" W x 5' Long Spall with Loose Concrete on Bottom Edge of South Arch, Above West Sidewalk (Looking North)

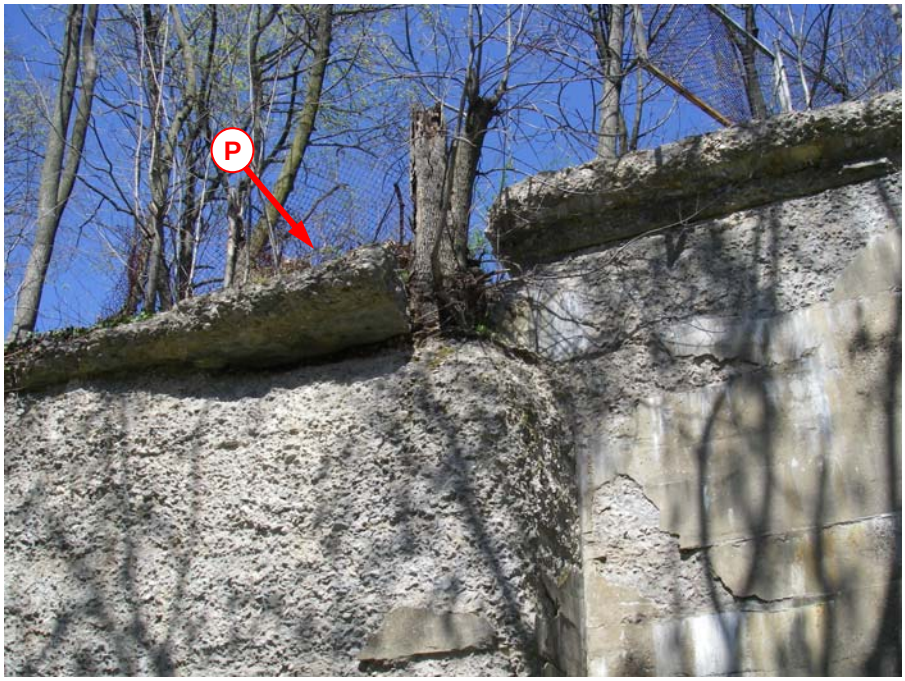

Photograph No. 16 – First Section of Southwest Retaining Wall (Looking North) Cap Block is Severely Undermined due to Significant Deterioration of the Retaining Wall Concrete. Cap Block will Likely Fall.

MODJESKI and MASTERS
Experience great bridges.

VILLAGE OF PELHAM - 195 Sparks Avenue, Pelham, NY, 10803

2012 BRIDGE INSPECTION PHOTOGRAPHS

B.I.N.: 7712870 **CARRIERS:** New York, Westchester and Boston Railway Bridge

OVER: Highbrook Avenue

Photograph No. 17 – West Face of SE Pilaster (Looking NE)
Spalled and Delaminated Concrete on Sidewalk Side of Pilaster
(SE Pilaster Shown, Others Similar)

Photograph No. 18 – Fencing Near top of Southwest Pilaster (Looking SW)
Hole in Fencing Enables Easy Access to Top Side of Arch Above Roadway

MODJESKI and MASTERS
Experience great bridges.

VILLAGE OF PELHAM - 195 Sparks Avenue, Pelham, NY, 10803

2012 BRIDGE INSPECTION PHOTOGRAPHS

B.I.N.: 7712870 **CARRIERS:** New York, Westchester and Boston Railway Bridge

OVER: Highbrook Avenue

Photograph No. 19 – First Section of Northeast Retaining Wall (Looking SE) This Cap Block Section Recently Fell. A Portion of the Soil and Vegetation above the Missing Cap Block Remains and is Undermined by up to 30"

Photograph No. 20 –Section of NE Retaining Wall (Looking NW from Above) Same Section shown in Photograph No. 19. The Dotted Line Indicated the Area of Soil Which is Undermined by the Missing Cap Block

MODJESKI and MASTERS
Experience great bridges.

VILLAGE OF PELHAM - 195 Sparks Avenue, Pelham, NY, 10803

2012 BRIDGE INSPECTION PHOTOGRAPHS

B.I.N.: 7712870 **CARRIERS:** New York, Westchester and Boston Railway Bridge

OVER: Highbrook Avenue

Photograph No. 21 – Northeast Retaining Wall (Looking West)
Top of Retaining Walls Have No Fall Protection Measures with Heights up to 25 ft.
(Northeast Retaining Wall Shown, Others Similar)

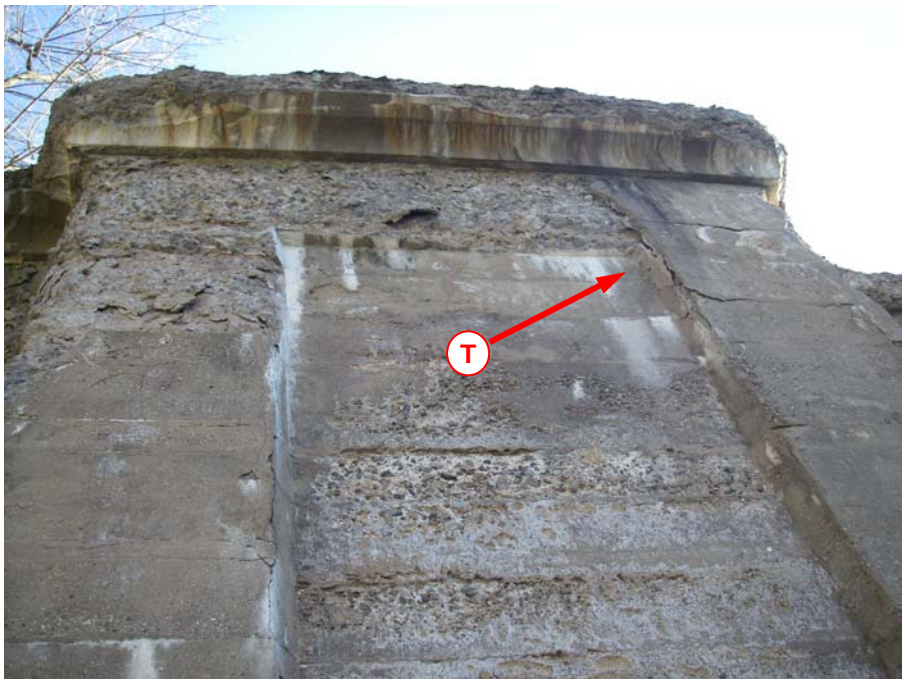

Photograph No. 22 – Top of Northeast Pilaster (Looking South)
Area of Spalled, Loose and Crumbling Concrete and Sections of Delaminated Concrete.

MODJESKI and MASTERS
Experience great bridges.

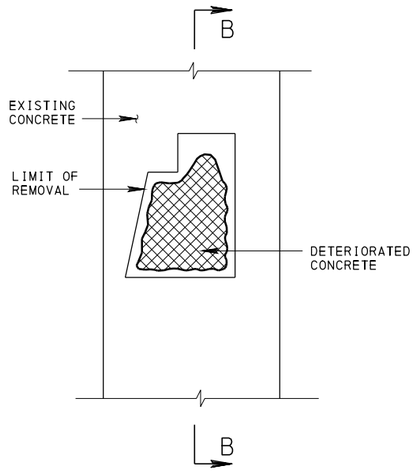

ELEVATION VIEW

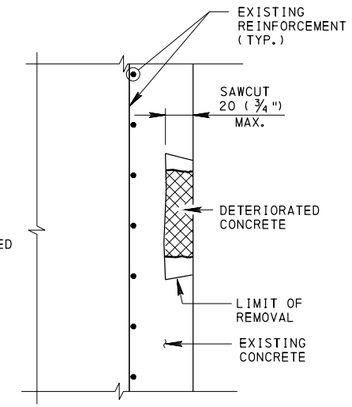

SECTION B-B

CONCRETE REPAIR TYPE 1

NOTE: REPAIR TYPE 1 IS USED WHEN DEPTH OF DETERIORATED CONCRETE IS LESS THAN OR EQUAL TO 20 (3/4").

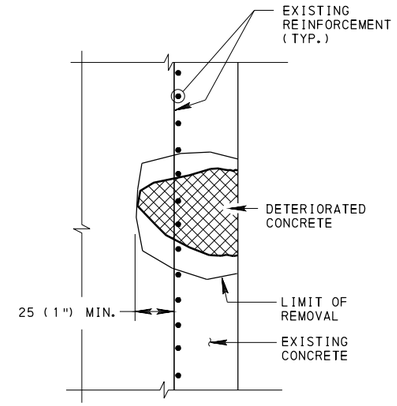

CONCRETE REPAIR TYPE 2
EXISTING REINFORCEMENT

NOTE: CONCRETE REPAIR TYPE 2 DETAIL FOR AREAS WITH EXISTING REINFORCEMENT.

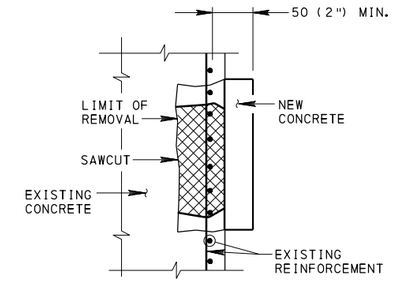

BLISTER DETAIL

NOTE: CONCRETE REPAIR TYPE 2 DETAIL FOR AREAS WITH EXISTING REINFORCEMENT HAVING INADEQUATE COVER.

REINFORCED CONCRETE REPAIR TYPE 1 NOTES:

1. SQUARE OFF DETERIORATED CONCRETE TO SOUND CONCRETE WITH A SAWCUT OF 20 (3/4") MAXIMUM.
2. REMOVE ALL LOOSE AND DELAMINATED CONCRETE TO PROVIDE A SOUND BOND BETWEEN EXISTING CONCRETE AND EPOXY MORTAR.
3. APPLY A RAPID HARDING CONCRETE PATCHING MATERIAL FROM A MANUFACTURER LISTED IN SECTION 679.2 (e) OF PUB. 408, IN ACCORDANCE WITH MANUFACTURER'S INSTRUCTIONS.

REINFORCED CONCRETE REPAIR TYPE 2 NOTES:

1. SQUARE OFF DETERIORATED CONCRETE TO SOUND CONCRETE WITH A SAWCUT OF 20 (3/4") MINIMUM BUT NOT TO THE DEPTH OF THE REINFORCEMENT STEEL.
2. REMOVE ALL LOOSE AND DELAMINATED CONCRETE TO PROVIDE A SOUND BOND BETWEEN EXISTING CONCRETE AND NEW CONCRETE.
3. IF DETERIORATED CONCRETE EXTENDS BEYOND THE PRIMARY REINFORCEMENT, REMOVE THE CONCRETE TO AT LEAST 25 (1") BELOW THE REINFORCEMENT.
4. APPLY AN EPOXY BONDING COMPOUND BETWEEN THE OLD AND THE NEW CONCRETE.
5. W REPRESENTS LEAST DIMENSION OF DETERIORATED CONCRETE.
6. USE DOWELS ONLY WHEN W DIMENSION OF DETERIORATED CONCRETE IS GREATER THAN 600 (2'-0") AND NEW OR EXISTING REINFORCEMENT CANNOT ADEQUATELY BE DEVELOPED BY LAPPING WITH EXISTING REINFORCEMENT.
7. WIRE MESH MAY BE SUBSTITUTED FOR NEW REINFORCEMENT IF INDICATED ON DESIGN DRAWINGS.

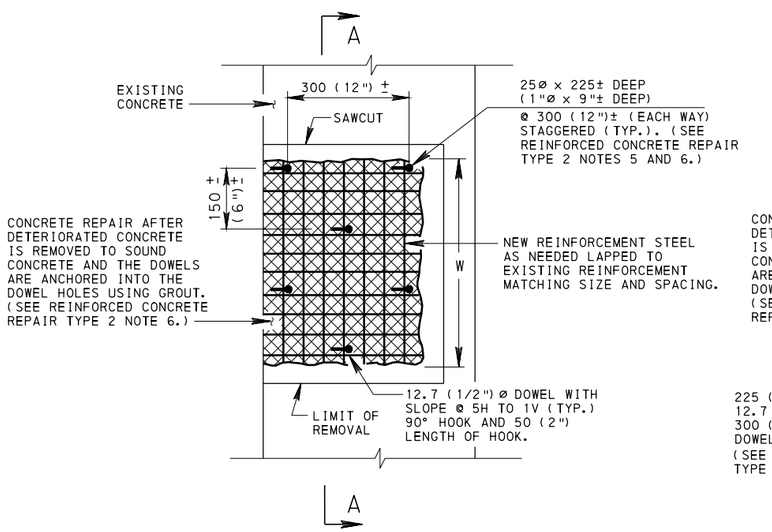

ELEVATION VIEW

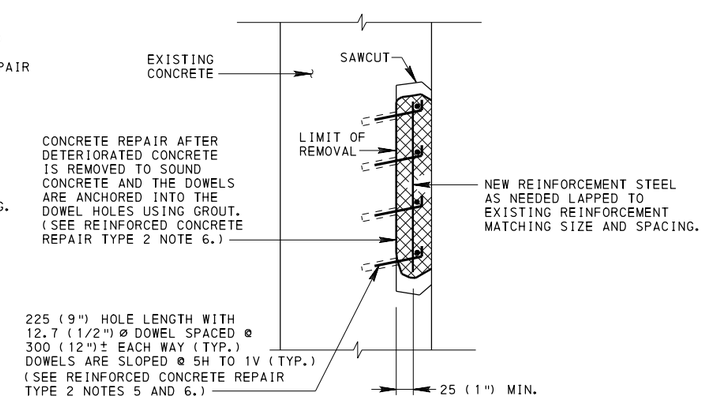

SECTION A-A

CONCRETE REPAIR TYPE 2
NEW REINFORCEMENT

NOTE: REPAIR TYPE 2 IS USED WHEN DEPTH OF DETERIORATED CONCRETE IS GREATER THAN 20 (3/4").

LEGEND

- REMOVE DETERIORATED CONCRETE.

NOTE: EITHER ALL METRIC OR ALL ENGLISH VALUES MUST BE USED ON PLANS. METRIC AND ENGLISH VALUES SHOWN MAY NOT BE MIXED.

COMMONWEALTH OF PENNSYLVANIA
DEPARTMENT OF TRANSPORTATION
BUREAU OF DESIGN

STANDARD
REINFORCED CONCRETE REPAIR

RECOMMENDED OCT. 26, 2010 Thomas P Macioce CHIEF BRIDGE ENGINEER	RECOMMENDED OCT. 26, 2010 Brian G Thompson DIRECTOR, BUREAU OF DESIGN	SHEET 2 OF 2 BC-783M

HIGHBROOK AVENUE NW&B RAILWAY BRIDGE

CONCRETE REMOVAL - COST ESTIMATE

Work Item	Unit	Total Quantity	Unit Cost $	Total Cost $
Maintenance of Traffic	DAY	3	1,500	4,500
Relocate Utility Lines	LS	1	5,000	5,000
Lift Truck	DAY	5	1,500	7,500
Debris removal	CY	60	200	12,000
Concrete Removal - Type A	SF	50	75	3,750
Concrete Removal - Type B	SF	650	25	16,250
Concrete Removal - Type C	LS	1	2,500	2,500
Concrete Removal - Type D	LF	180	50	9,000
SUB-TOTAL				60,500
MOBILIZATION			5%	3,025
ACCESS			5%	3,025
CONTINGENCY			10%	6,050
OVERHEAD & PROFIT			20%	12,100
TOTAL				84,700

USE = $85,000

This cost estimate is for the intial removal of loose/deteriorated concrete on the arch span and pilasters and the removal of the underminded cap block on the southwest wingwall.

Concrete Removal

Type A - Overhead Spalled/Unsound Area (Underside of Arch)

Type B - Vertical Face Spalled/Unsound Area (Arch Fascias, Spandrel Walls and Pilasters)

Type C - Wingwall Cap Block Removal (Undermined Cap Block on Southwest Wingwall)

Type D - Cap Block Removal (Removal of 30"x30" Coped Cap Block from Pilaster to Pilaster on both North and South Sides of Bridge.)

Note: Additional engineering costs for developing a bid package and inspection costs have not been included in this estimate.

HIGHBROOK AVENUE NW&B RAILWAY BRIDGE

DEBRIS NETTING - COST ESTIMATE

Work Item	Unit	Total Quantity	Unit Cost $	Total Cost $
Maintenance of Traffic	DAY	3	1,500	4,500
Lift Truck	DAY	5	1,500	7,500
Debris Netting	SF	8,000	2.0	16,000
Wire Rope	LF	3,500	5	17,500
Hardware	LS	1	10,000	10,000
Installation Labor	HRS	300	65	19,500
SUB-TOTAL				75,000
MOBILIZATION			5%	3,750
ACCESS			5%	3,750
CONTINGENCY			10%	7,500
OVERHEAD & PROFIT			20%	15,000
TOTAL				105,000

USE = $105,000

This cost estimate is for the installation of debris netting placed on the underside and fascias of the arch, on the spandrel walls and on the vertical faces of the pilasters.

Note: Additional engineering costs for developing a bid package and inspection costs have not been included in this estimate.

HIGHBROOK AVENUE NW&B RAILWAY BRIDGE
CONCRETE REPAIR - COST ESTIMATE

Work Item	Unit	Total Quantity	Unit Cost $	Total Cost $
Maintenance of Traffic	DAY	3	1,500	4,500
Lift Truck	DAY	5	1,500	7,500
Concrete Repair - Type E	SF	50	500	25,000
Concrete Repair - Type F	SF	325	200	65,000
Concrete Repair - Type G	SF	1,568	100	156,750
Top Fencing	LF	125	10	1,250
SUB-TOTAL				260,000
MOBILIZATION			5%	13,000
ACCESS			5%	13,000
CONTINGENCY			10%	26,000
OVERHEAD & PROFIT			20%	52,000
TOTAL				364,000

USE = $365,000

This cost estimate is for the repair of deteriorated concrete areas on the arch span and pilasters.
This estimate is not for a complete rehabilition, which would include extensive repairs to the retaining walls, addtional architectural treatments and the addition of new railing along the length of the arch span.

Concrete Repair
- Type E - Overhead Spall Repair (Underside of Arch)
- Type F - Vertical Face Spall Repiar ((Arch Fascias and Spandrel Walls)
- Type G - Pilaster Concrete Repair (The quantity for this repair includes 75% of the Pilaster faces. Only a portion of the Pilaster surfaces currently contain loose/delaminated concrete, which was included in the Concrete Removal, Type B. A large portion of the remaining surfaces are still severely deteriorated and should be included in any repair work.)

Note: Additional engineering costs for developing repair plans and specifications and inspection costs have not been included in this estimate.

HIGHBROOK AVENUE NW&B RAILWAY BRIDGE

ADDITIONAL FENCING - COST ESTIMATE

Work Item	Unit	Total Quantity	Unit Cost $	Total Cost $
Vegetation Removal	SF	3,000	3.0	9,000
Debris removal	CY	30	200	6,000
Fencing Repair	LS	1	500	500
New Fencing	LF	600	15	9,000
New Gate with Pad Lock	LS	2	1,000	2,000
SUB-TOTAL				26,500
MOBILIZATION			5%	1,325
ACCESS			5%	1,325
CONTINGENCY			10%	2,650
OVERHEAD & PROFIT			20%	5,300
TOTAL				37,100

USE = $40,000

This cost estimate is for the installation of new fencing along the length of the retaining walls and sections of fencing with gates connecting the ends of retaining wall fencing.